Instruction Manual for
AR series
VIGO SERVO™

CONTENTS

1. Specifications for AR series VIGO SERVO

1.1 Basic structure

◆ AR series consists of a ***servo actuator*** and ***servo driver/controller***.

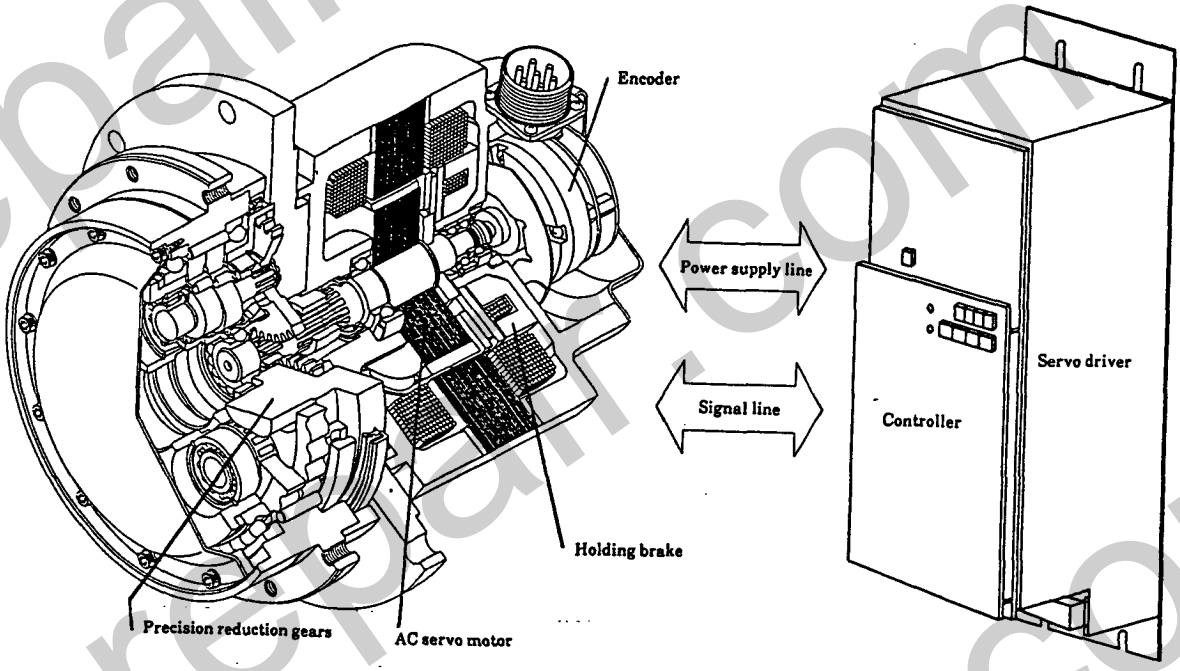

(Servo actuator) (Servo driver/ controller)

◆ AR series

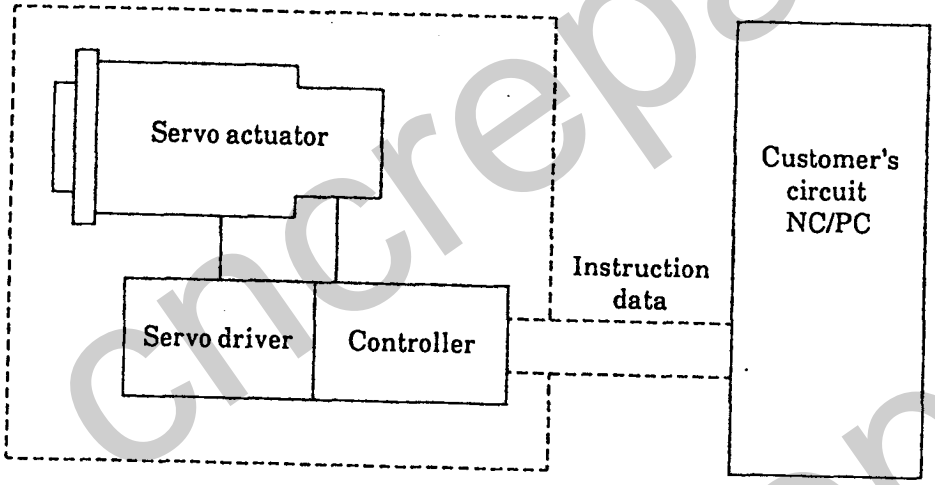

- 1 unit of servo driver/controller is used for 1 unit of servo actuator.
- For the position sensor, select an incremental encoder or multiturn absolute encoder.
- Connection cables between each of the equipment are not provided as standard accessories.

1.2 Indications of types

AR135A128-BA0-X

- Series name
- Frame number
  * See the specification table (in page 4)
- Type indications
  * See the diagram below:
- Reduction gear ratio
  * See Table for the specifications (in page 4)
- Brakes

B	With
0	Without

- Types of the encoder

A	Multiturn absolute type
1	Incremental type
0	No

- Options

0	No
1	MDI

- Special specifications

◆ Indication of types

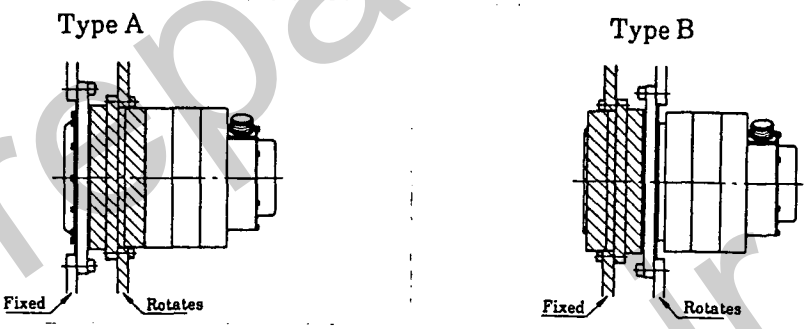

◆ Direction of rotation

The direction of rotation of the servo actuator is when seen from ~~the encoder side.~~ the servo actuator output shaft.

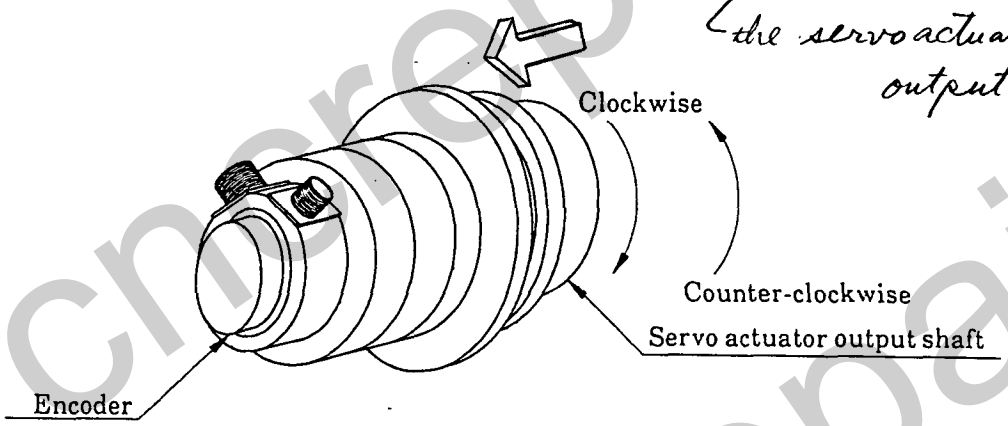

◆ Indications for the servo driver and controller

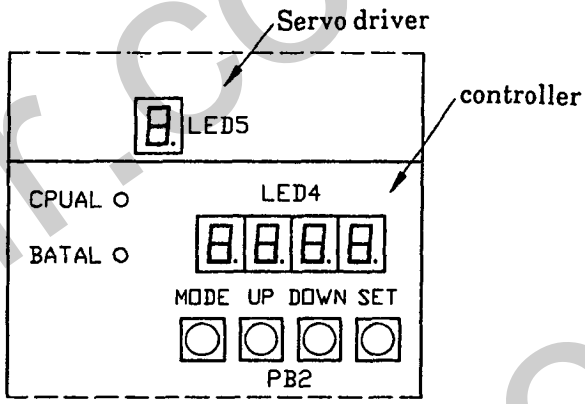

1.3 Table for the specifications

Types			AR15				AR30				AR60				AR135			
Servo actuator	Rated output of the servo motor	kW	0.4				0.8				1.5				2.5			
	Reduction gear ratio (R)	1:R	56	80	104	120	56	80	104	120	80	100	120	152	80	100	128	170
	Rated output torque	kgf·m	7.0	10	12	14	13	19	25	29	38	48	58	65	77	96	123	135
	Permissible torque during acceleration and deceleration	kgf·m	23	28	28	28	45	64	83	85	120	150	162	162	198	248	317	337
	Rated output revolutions	rpm	44	31	24	20	44	31	24	20	31	25	20	16	25	20	16	12
	Maximum output revolutions	rpm	50	37	28	25	50	37	28	25	37	30	25	20	25	25	20	15
	Backlash	arc·min	1				1				1				1			
	Lost motion	arc·min	1				1				1				1			
	Rigidity	kgf·m/min	3.5				8				16				36			
	Allowable load GD^2	kgf·m²	20	42	71	95	61	125	211	282	303	474	682	1095	1014	1582	2596	4580
	Servo lock allowable torque	kgf·m	6	9	11	13	12	17	22	25	34	42	50	64	67	84	107	143
	Holding brake: Holding brake power	kgf·m	10	14	18	21	21	30	39	45	60	75	90	114	120	150	192	255
	Holding brake: Voltage	V	DC 24V ± 10%															
	Holding brake: Current	A	0.25				0.4				0.5				0.75			
	Speed and position sensor	p/rev	Multiturn absolute type : 2048p/rev · Incremental type : 2500p/rev															
	Weight	kg	12.5				27				37				73.5			
Servo driver	Control methods		Transistor PWM controls															
	Input power supply: Main circuit control power		Three-phase AC 200 to 220V ± 10% 50/60 Hz.															
	Input power supply: Power capacity	kVA	0.8				1.2				1.8				3.5			
	Continuous output current	Arms	3.0				4.6				8.0				16.0			
	Maximum output current	Arms	11				17				28				42			
	Protection functions		Overvoltage, excess current, open signal line, low voltage, over load, over heat, trip of NFB, open power line, abnormalities in circuits, and abnormalities in 5V power supply. (When an alarm for any of above is actuated, the dynamic brake works to make an emergency stop.)															
Controller	Positioning functions		For equipartition and indexing, maximum 255 partitions of indexing (8 bit binary code), indexed address instructing method, and parameter setting of operation conditions.															
	Input signals		Address command, operation start, mode selection, manual command CW/CCW, operation preparation command, servo on, interlocking, reset, zero point LS.															
	Output signals		Present address indication, positioning ready, operation preparation ready, home position, servo actuator in operation, control alarm, controller alarm, driver alarm and battery alarm.															
	Protection functions		Controller alarm, battery alarm, positional deviation limit, communication abnormality, excess drift, overflow, Unknown zero point and abnormality in multiturn absolute encoder. (When an alarm for any of above is actuated, the dynamic brake works to make an emergency stop.)															
Weight of the servo driver/controller		kg	9															

Remark 1: A reduction gear ratio(R) of 140 is also available with AR15.

Remark 2: A reduction gear ratio(R) of 152 is also available with AR30.

Contact us for details.

1.4 Using environment

◆ AR series are designed for indoor use. Troubles may occur when using environment is not suitable. Always use under following environmental conditions.

- Ambient temperature for use: 0 to +40°C
- Ambient temperature for storage: −20 to +80°C
- Humidity: 80% RH or less (Dew condensations should not occur.)
- Atmosphere:

(1) Indoor location without existence of corrosive gas or explosive gas.

(2) Well ventilated location with less iron powder, dust and humidity.

(3) A location away from a source of vibrations.

* It causes imperfect contacts in the connector, electro-magnetic contactor, and relay.

- Water-proofing and oil-proofing:

(1) Servo actuator protection standard IP-53 equivalent.

* Provide a cover when substantial amount of water drips or oil drips fall.

(2) The input and output connectors of the servo actuator is shielded by silicon.

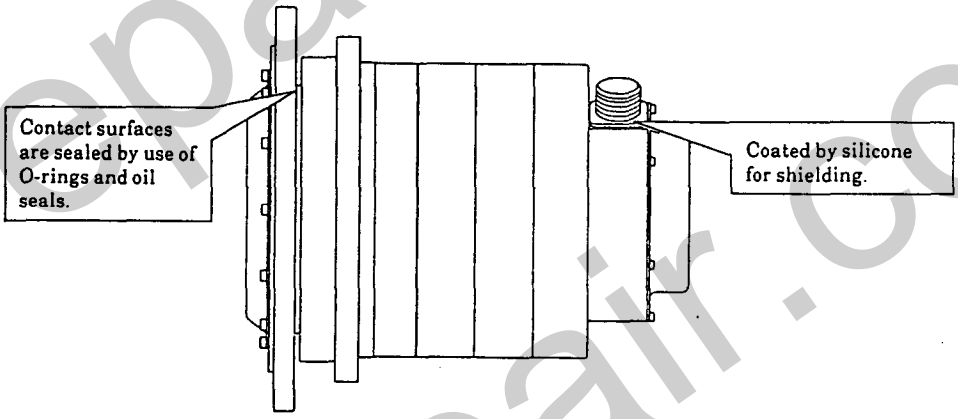

- Others: Refer to the chapter 6 (Page 59) for cautions in assemblies, installations and wiring.

1.5 Block diagrams of the servo driver/controller

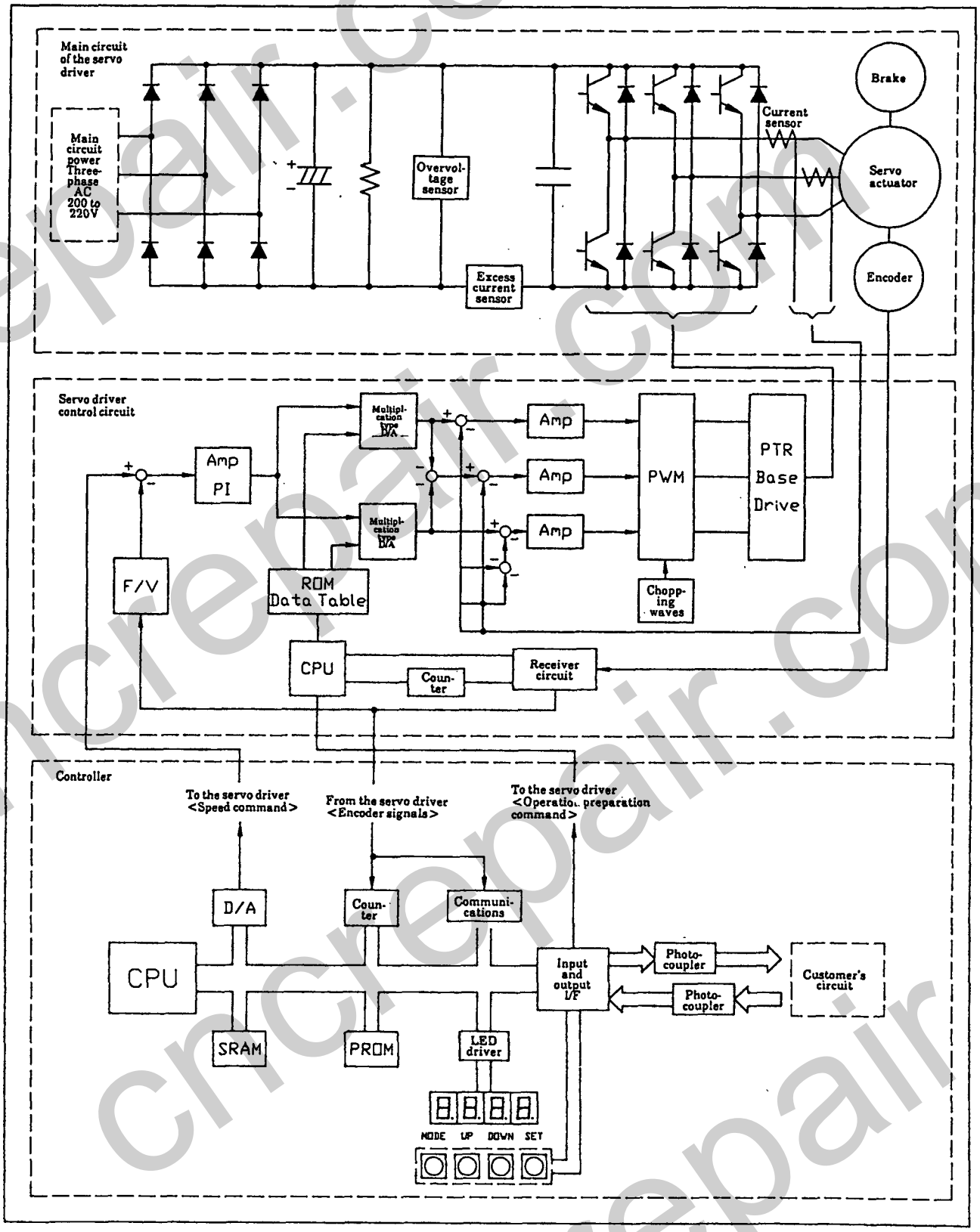

2. AR series dimensional outline drawings

2.1 Dimensional outline drawings of the servo actuator

AR15A

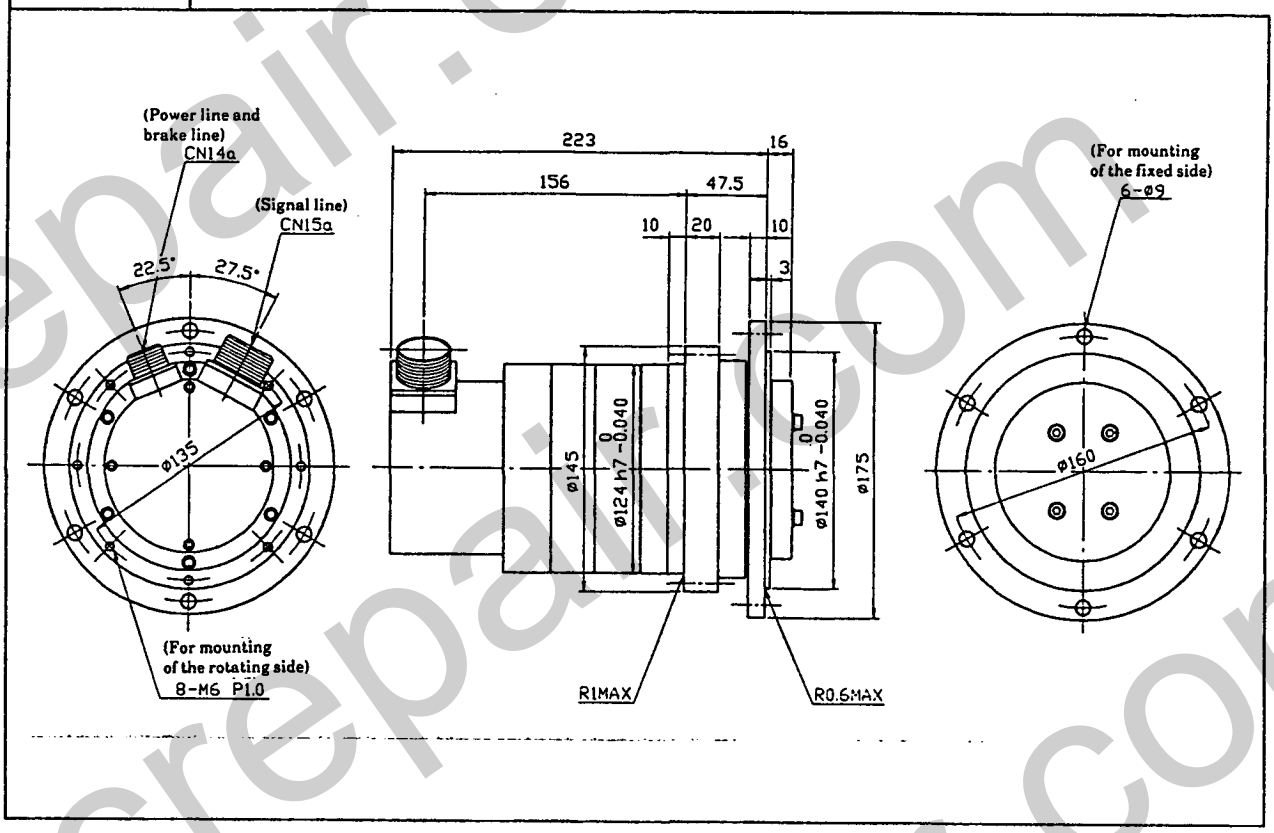

AR15B

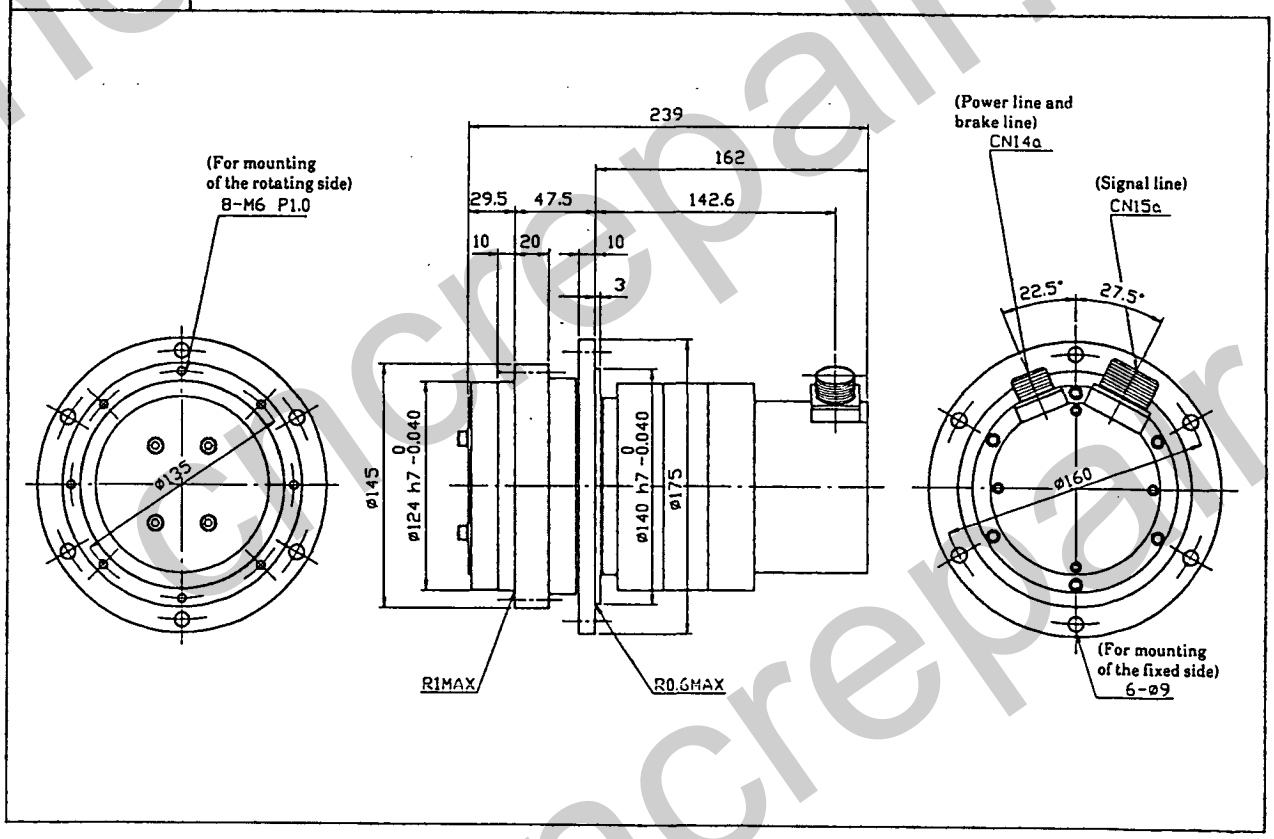

AR30A

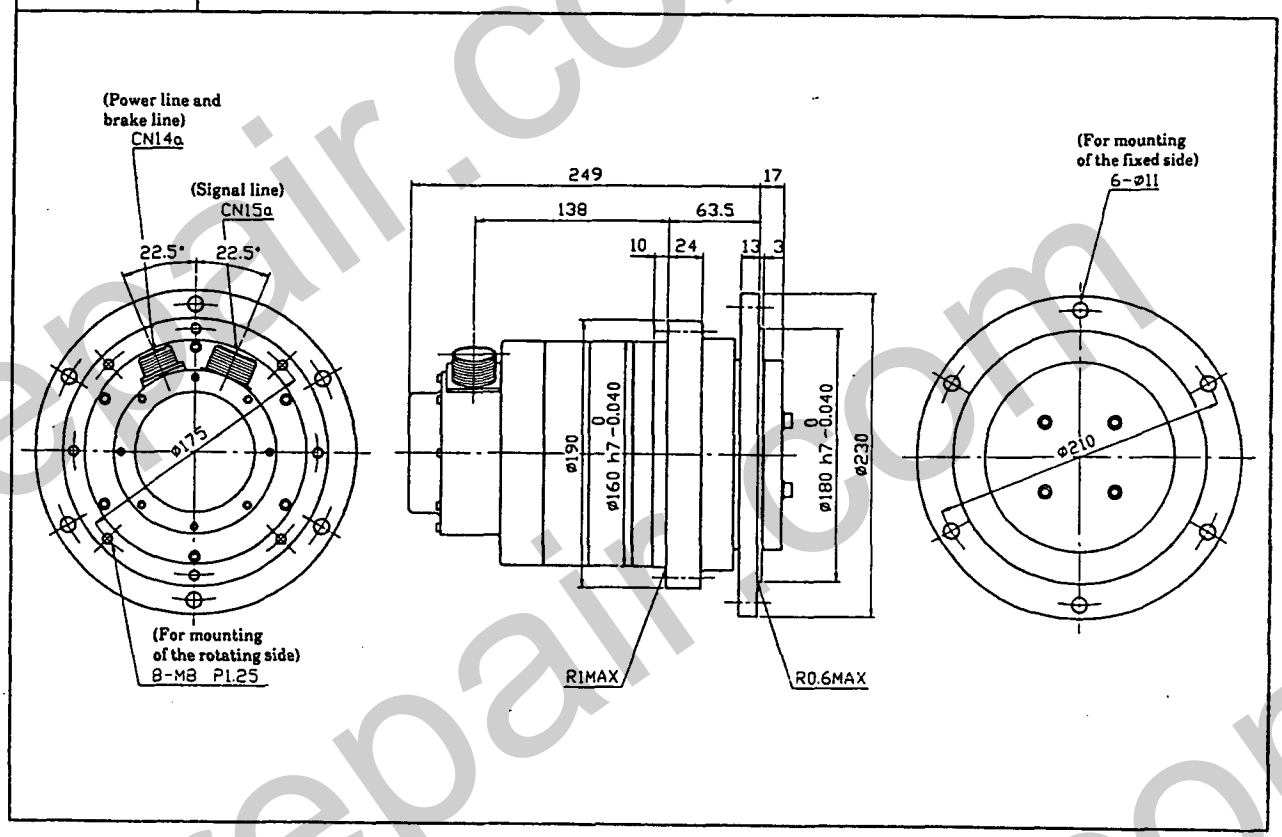

AR30B

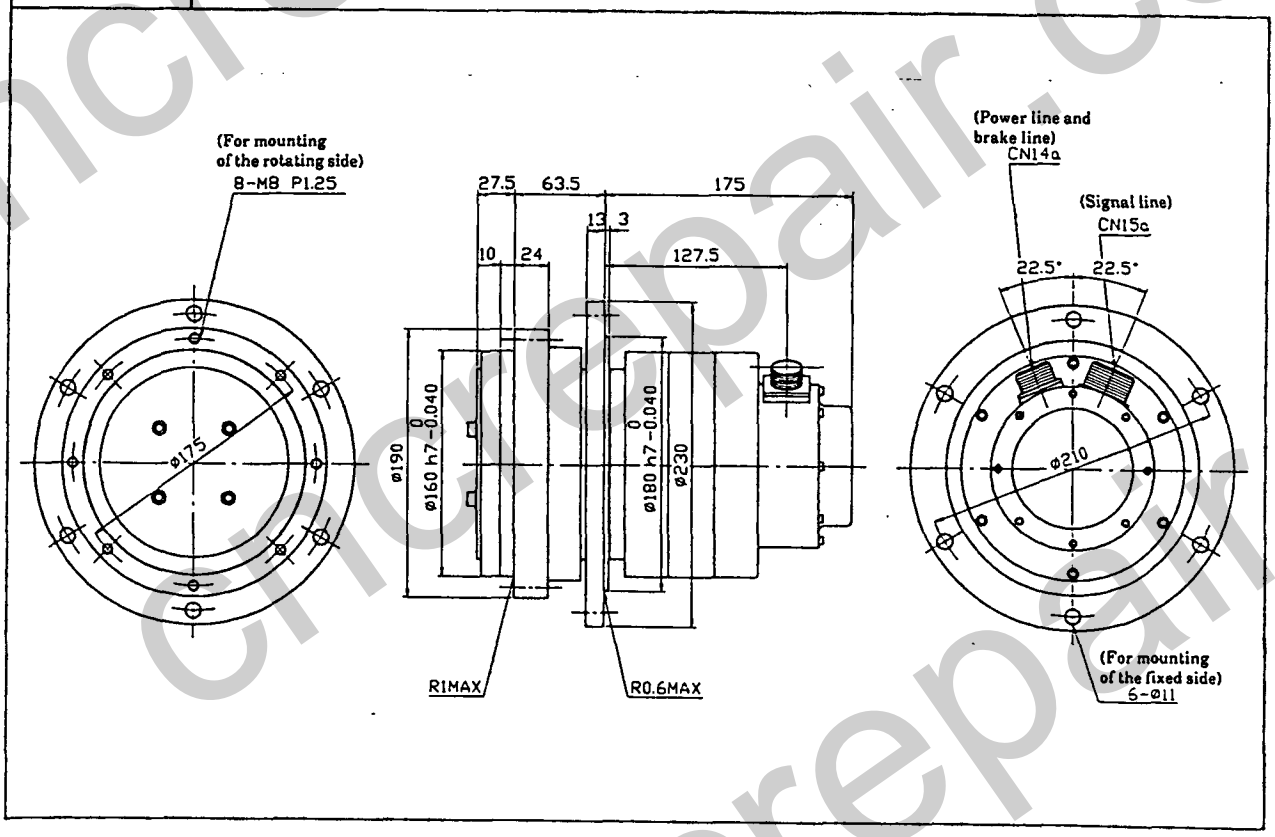

AR60A

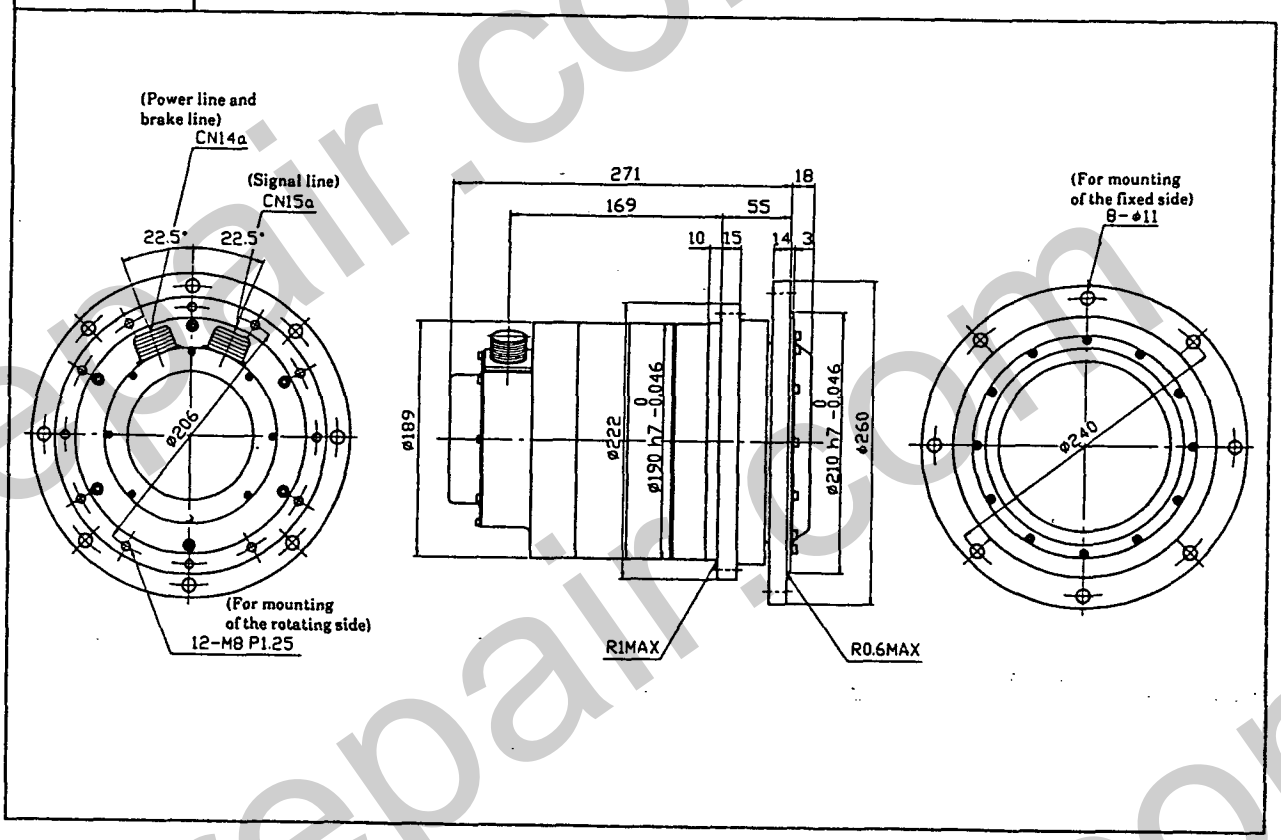

AR60B

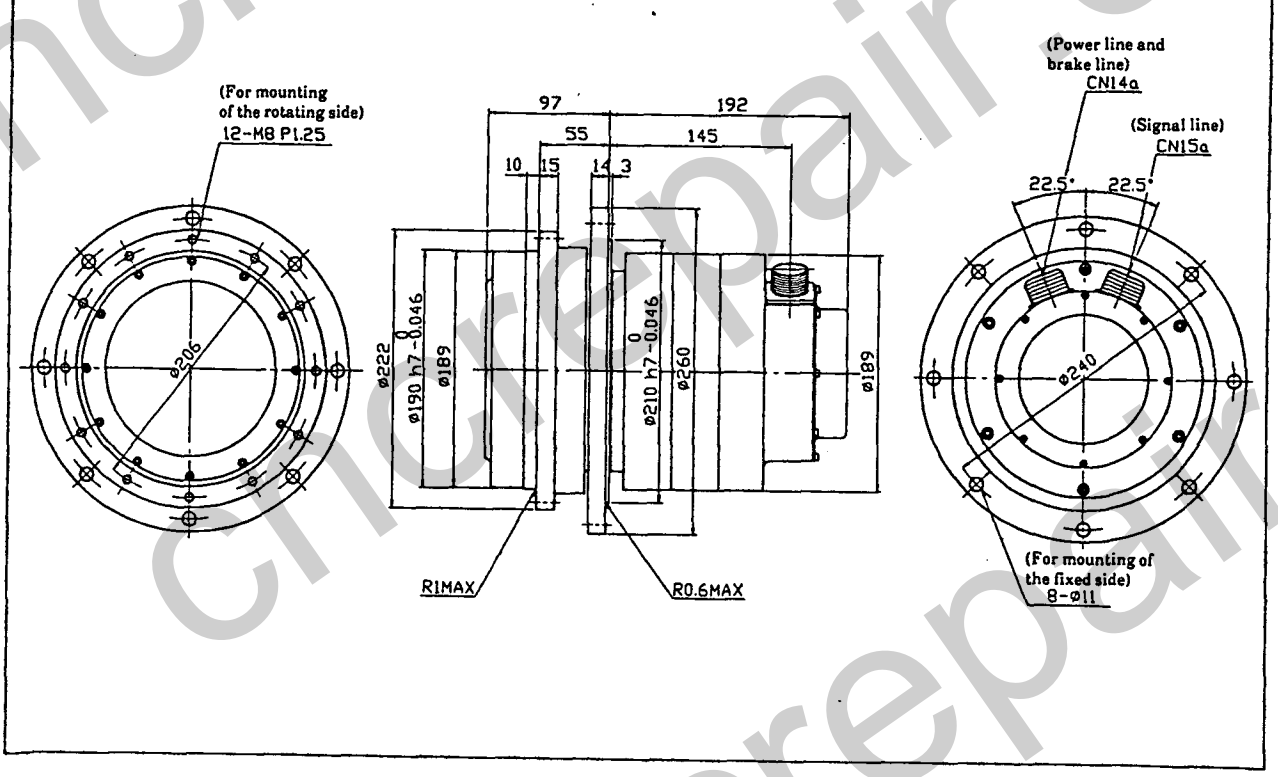

AR135A

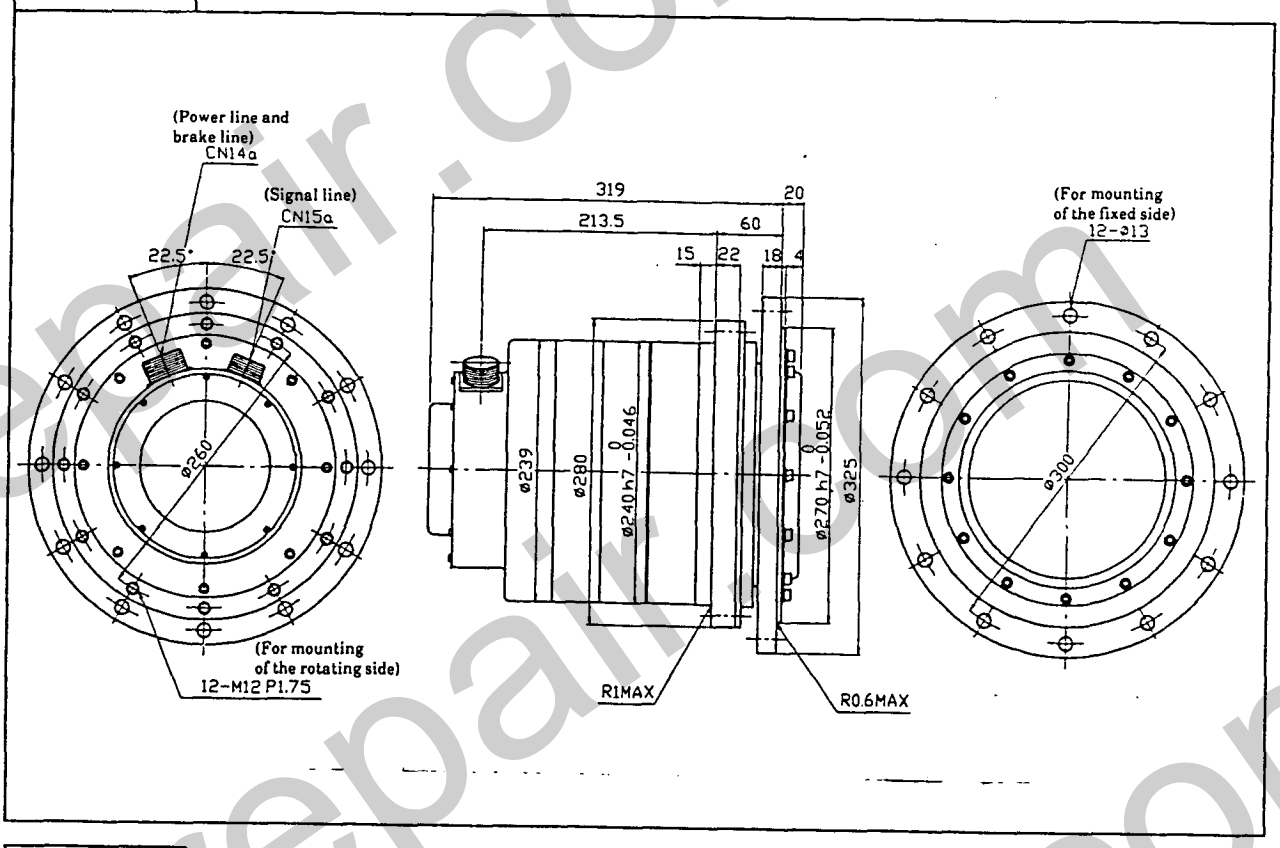

AR135B

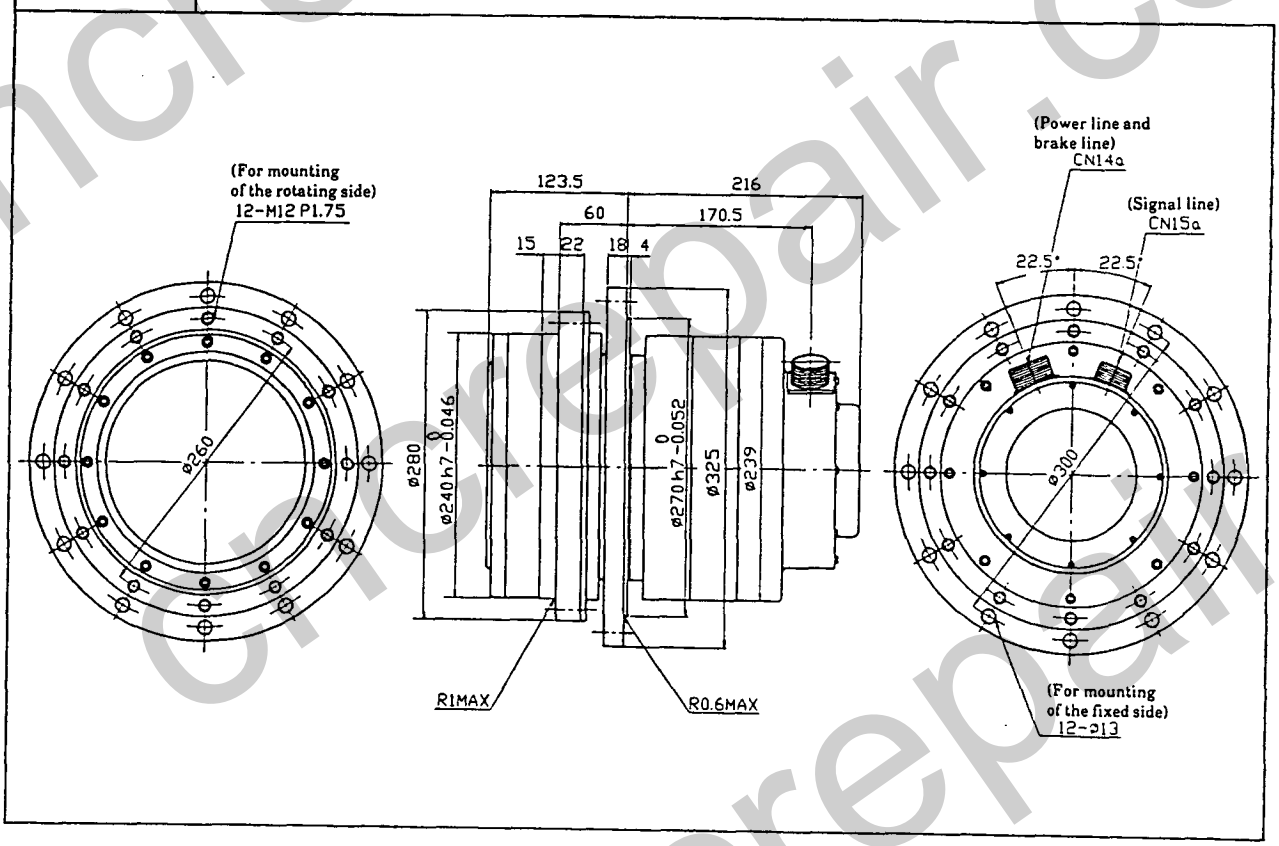

2.2 Dimensional outline drawings of the servo driver/controller

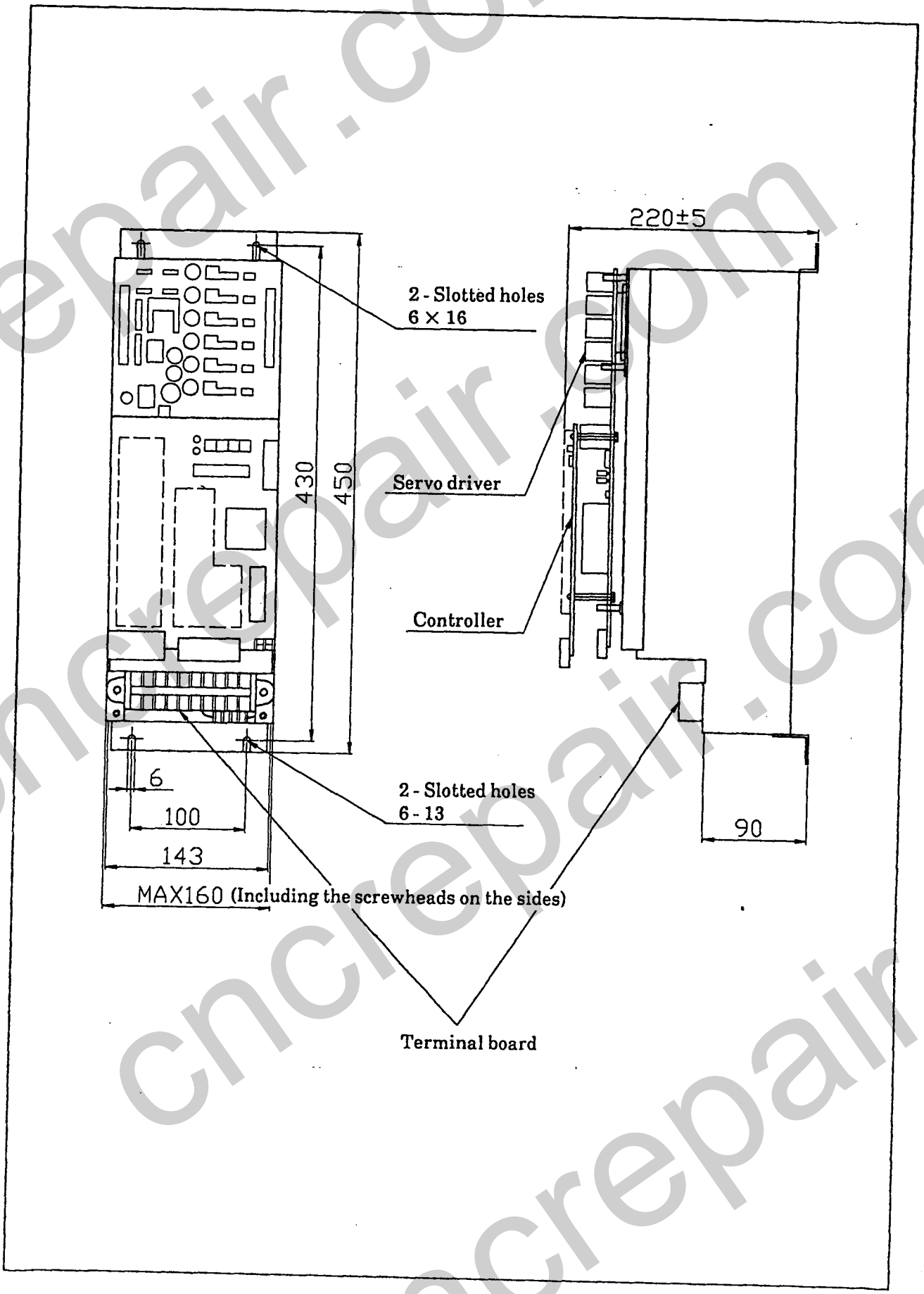

3. Selecting the servo actuator

3.1 Mechanical characteristics

3.1.1 Rigidity (spring constant and lost motion) and backlash

When torque is applied to the output shaft with the input shaft side (servo motor shaft of the servo actuator) fixed, torsions corresponding to the torque occur generating the hysteresis curve as shown below. The rigidity of the servo actuator is indicated by the spring constant, lost motion and backlash.

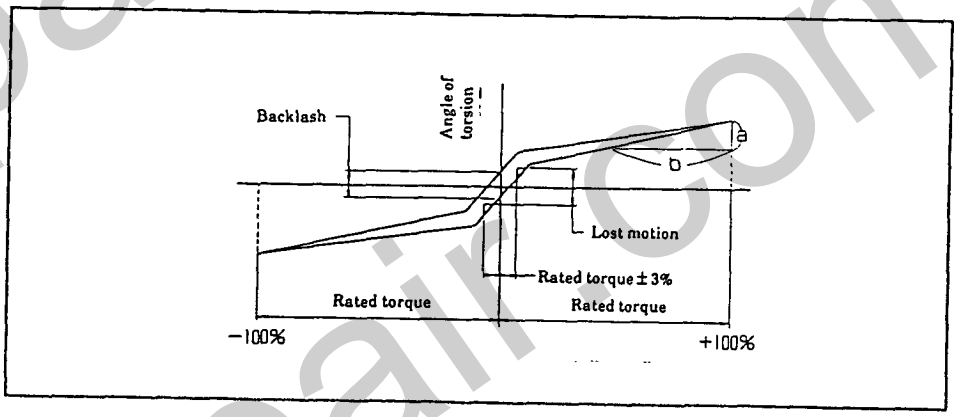

- Spring constant $= \dfrac{\text{Rated torque} / 2}{\text{Angle of torsion when rated torque is applied.} - \text{50\% angle of torsion when rated torque is applied.}} = \dfrac{b}{a}$

- Lost motion
  Means the angle of torsion at the midpoint of the hysteresis curve deviation at ±3% of the rated torque.

- Backlash
  Means the angle of torsion at 0 torque with the hysteresis curve.

- Calculation of the angle of torsion (θ) and the amount of torsion

The angle of torsion and the amount of torsion when a load torque (unbalanced load, etc.) is applied to the servo actuator from a single direction may be obtained by the following equations. The overall angle of torsion when loads are applied in forward and reverse, meanwhile, becomes a double of the figure obtained from the following equations plus the backlash.

Model \ Items	Spring constant (kgf·m/min.)	Lost motion (min.)	Backlash (min.)
AR15	3.5	1	1
AR30	8		
AR60	16		
AR135	36		

- Angle of torsion (θ)(min.) $= \dfrac{\text{Lost motion}}{2} + \dfrac{\text{Load torque}}{\text{Spring constant}}$

- Amount of torsion (mm) $= \ell \times \tan\left(\dfrac{\theta}{60}\right)$

  ℓ: Distance (mm) between the center of rotation of the servo actuator and the point of the load.

3.1.2 Angle transfer accuracy

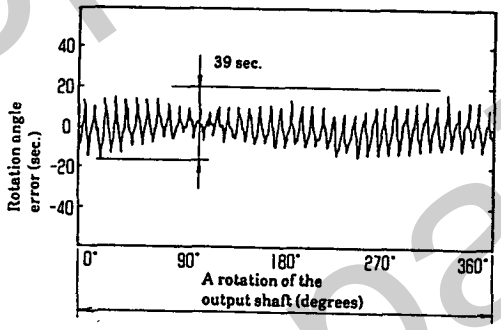

(An example of actual measurement: AR60)

The angle transfer accuracy means the difference between the theoretical output rotation angle and actual output rotation angle (θ_{out}) when an input of any rotation angle (θ_{in}) is instructed to the servo actuator.

This accuracy is indicated by ANGLE TRANSFER ERROR (θ_{er}).

- Angle transfer error (θ_{er}) $= \dfrac{\theta_{in}}{R} - \theta_{out}$

  [R: Reduction gear ratio]

- The ANGLE TRANSFER ERROR (θ_{er}) of the AR series is a minute (in angle) or less.

3.2 Selection of the servo actuator

For selection of the most appropriate servo actuator

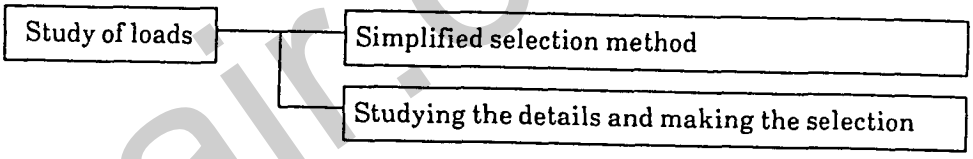

3.2.1 Study of loads

(1) Studying the load cycle

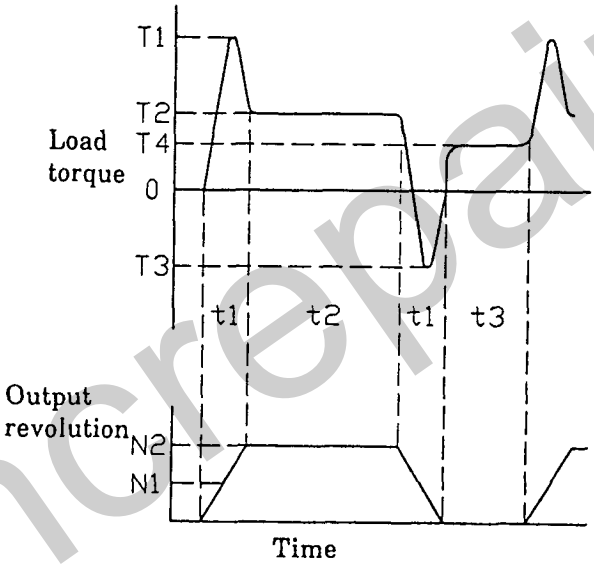

T_1: Maximum torque during acceleration (kgf·m)

T_2: Torque under the steady operation (kgf·m)

T_3: Maximum torque during deceleration (kgf·m)

T_4: Holding torque during stoppage. (kgf·m)

t_1: Acceleration and deceleration time (sec)

t_2: Steady operation time (sec)

t_3: Stopping time (sec)

N_1: Average revolution during acceleration and deceleration (rpm) $N_1 = N_2/2$

N_2: Revolution during steady operation (rpm)

Remark: With AR series, the acceleration time equals to the deceleration time and the revolution during acceleration is same as the

(2) Calculation of load torque

- Calculation of the maximum torque during acceleration

$$T_1\ (\text{kgf·m}) = \frac{GD^2 \times N_2}{375 \times t1} + T_2$$

GD^2 : Load GD^2 (kgf·m²)

- Calculation of the torque during steady operation

$$T_2\ (\text{kgf·m}) = \text{Friction torque} + \text{unbalanced load}$$
$$= \mu W_1 \ell + W_2 \ell$$

μ : Friction coefficient

W_1 : Load (kg)

W_2 : Unbalanced load (kg)

ℓ : Distance between the center of rotation and the point of load (m)

- Calculation of the maximum torque during deceleration

$$T_3\,(\text{kgf·m}) = T_2 - \frac{GD^2 \times N_2}{375 \times t1}$$

- Calculation of the holding torque during stoppage

$$T_4\,(\text{kgf·m}) = \text{Unbalanced load torque}$$
$$= W_2 \ell$$

3.2.2 Simplified selection method

- Select the type of the servo actuator in the following manner.
- When the requisitions exceeds the ratings and tolerances of the type of the tentatively selected serve actuator, shift to a higher grade type or degrade the load conditions, so that the requisitions may stay within the rating and tolerance of the selected servo actuator.

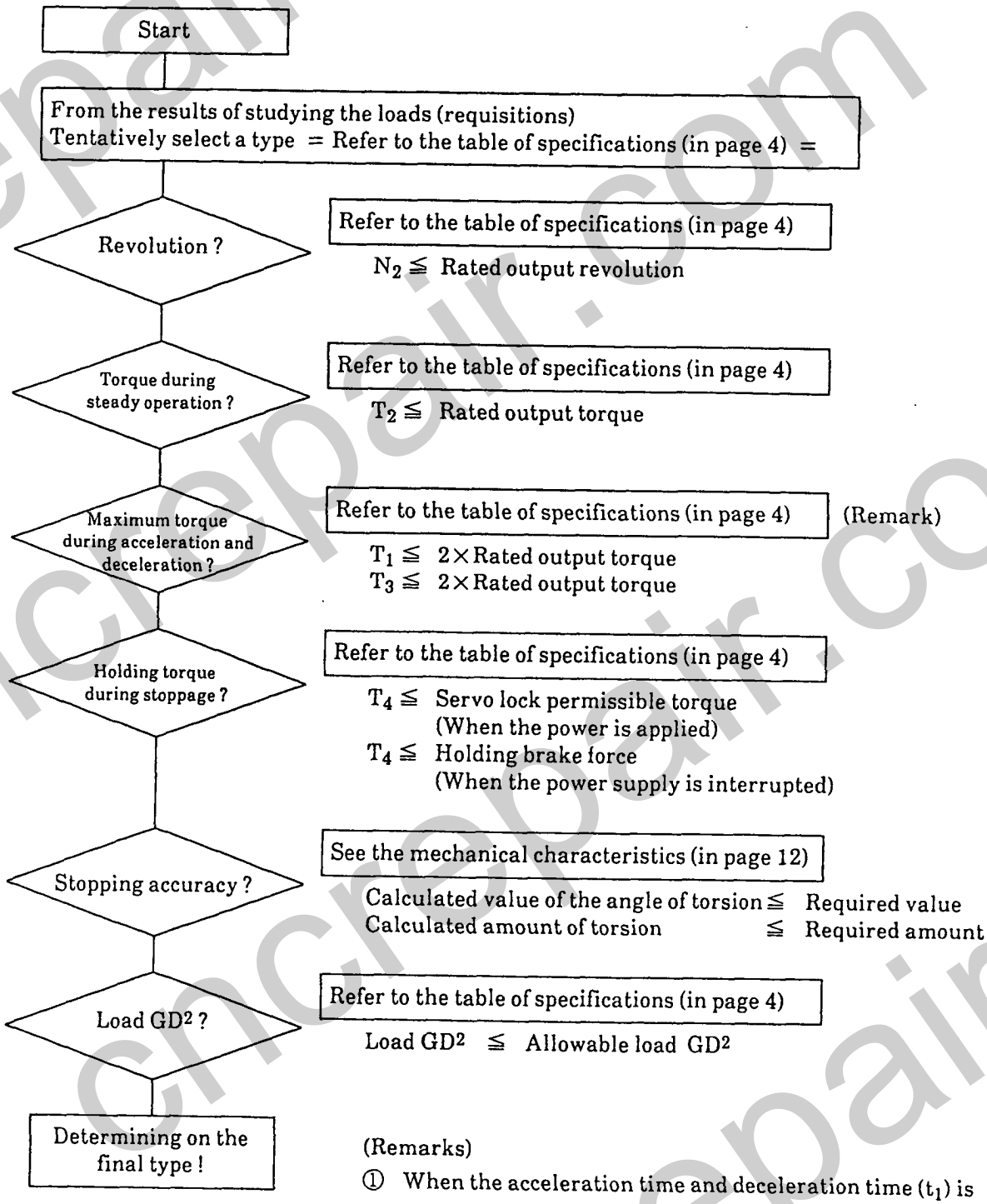

(Remarks)

① When the acceleration time and deceleration time (t_1) is less than 0.3 sec., check the motor shaft maximum torque in page 22.

② Check the bearing capacity in page 19 and regenerative brake capacity in page 22.

3.2.3 Studying the details and making the selection

- When studying details and selecting the optimum type of the servo actuator in accordance with the required specifications, follow the procedures below.
- After studying, when any one item of the requisitions exceeds the tolerance of the servo actuator, grade up the type for selection or degrade the conditions such as of load torque.

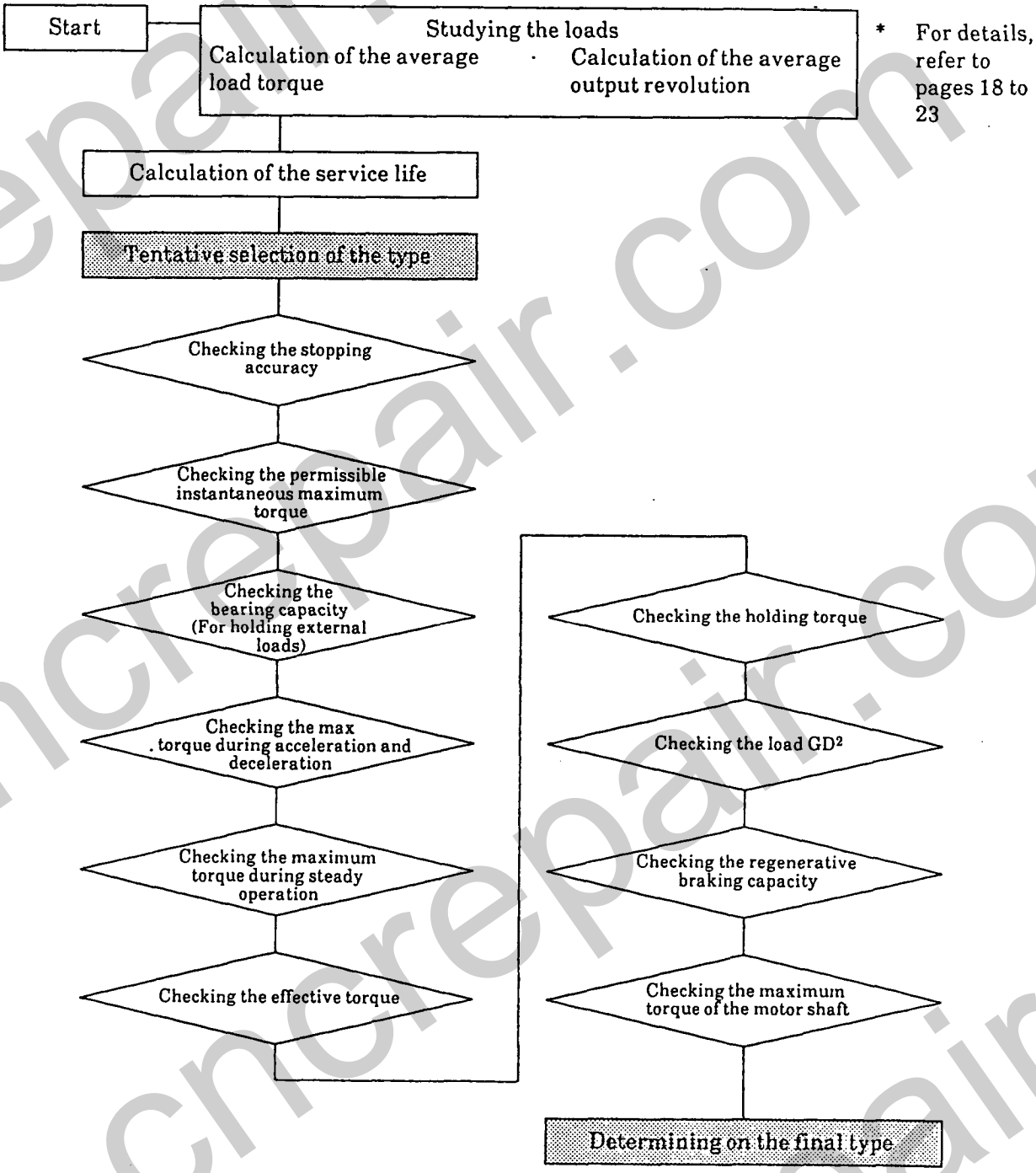

(1) Studying the loads

◆ The loads applied to the servo actuator are not in a state of continuous steady load but the load torque fluctuate greatly.

Study of the loads should therefore be made after converting these various status of load torque to the average load torque.

▸ Calculation of the average load torque

$$T_m = \sqrt[10/3]{\frac{t_1 \cdot N_1 \cdot T_1^{10/3} + t_2 \cdot N_2 \cdot T_2^{10/3} + t_1 \cdot N_1 \cdot T_3^{10/3}}{2 \cdot t_1 \cdot N_1 + t_2 \cdot N_2}} \quad (\text{kgf-m})$$

▸ Calculation of the average output revolution

$$N_m = \frac{2 \cdot t_1 \cdot N_1 + t_2 \cdot N_2}{2 \cdot t_1 + t_2} \quad (\text{rpm})$$

(2) Calculation of the service life

▸ Calculation of the service life

- Calculate the service life from the average load torque (T_m) and the average output revolution (N_m).

$$L_m = 6000 \times \frac{15}{N_m} \times \left(\frac{T_o}{T_m}\right)^{10/3} (H_r)$$

Types	Standard torque (T_o)
AR15	14 kgf-m
AR30	34 kgf-m
AR60	65 kgf-m
AR135	135 kgf-m

▸ Calculating the needed service life

$$L_w = \frac{A \times B \times C \times D}{3600} \quad (Hr)$$

- How many seconds of actual operation constitute a cycle ? (A: sec/cycle)
- For how many cycles a day is it operated ? (B: cycle/day)
- On how many days in a year actual operations are made ? (C: days/year)
- For how many years the actual operations will be continued ? (D: years)

Tentative selection of the type

Service life $L_m \geqq L_w$ ⇨ Selection of the type

(3) Checking the stopping accuracy

- Calculate the angle of torsion (θ) and the amount of torsion when unbalanced loads are applied referring to the clause for the mechanical characteristics (in page 12), and make sure the calculated values are within the extent of the required values.

(4) Checking the permissible instantaneous maximum torque

- When very large torque is applied instantaneously at the time of an emergency stop or by external shocks, the servo actuator may be damaged.
- Make sure these values of very large instantaneous torque may not exceed the permissible instantaneous maximum torque.

Types	Permissible instantaneous maximum torque
AR15	70 kgf-m
AR30	170 kgf-m
AR60	325 kgf-m
AR135	675 kgf-m

(5) Checking the bearing capacity (For holding external loads)

- Bearings are provided to support external loads directly.
- The bearing capacity is indicated by the allowable moment capacity.
- Calculate the moment values and make sure the calculated values are within the limit of the allowable moment capacity.
- Contact us in case large thrust loads are expected to be applied or in case torsion of the output shaft causes some problems.

▸ Calculation of moment (MC)

$$MC = W_1\ell_1 + W_2\ell_2$$

MC	:	Moment	(kgf·m)
W_1, W_2	:	External loads	(kg)
ℓ_1, ℓ_2	:	Distances	(m)

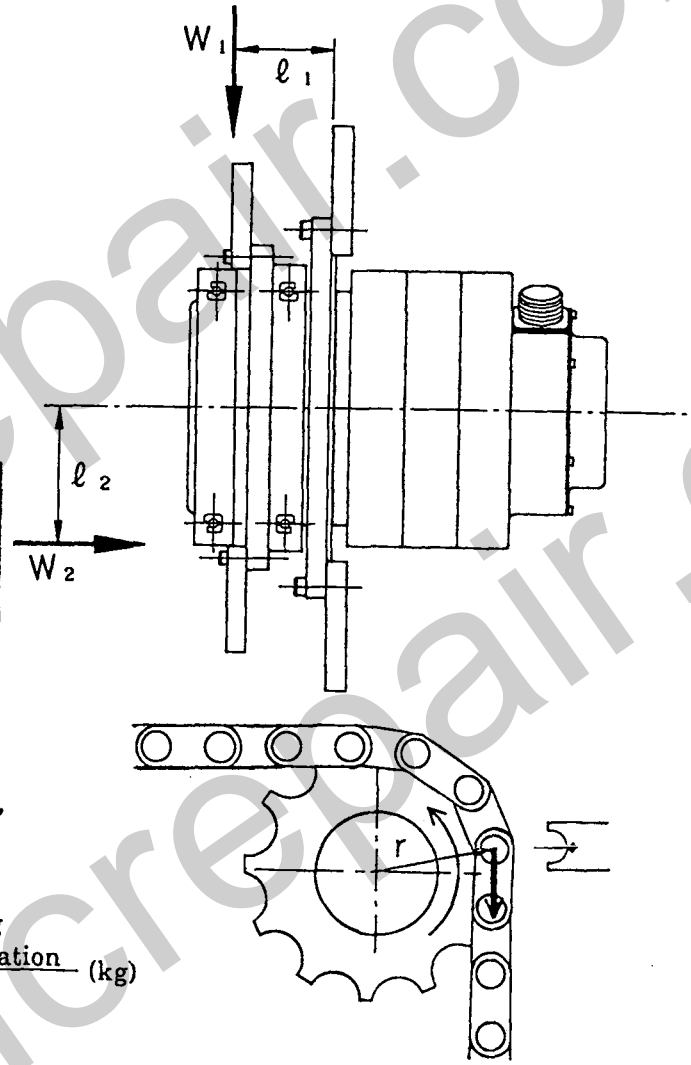

▸ A condition for the selection

- MC ≦ Allowable moment capacity

Allowable moment capacity

Types	Allowable moment capacity kgf·m
AR15	51
AR30	96
AR60	114
AR135	268

Remark:
When the case is as illustrated to the right, calculate the torque reaction force and add the value to the external load.

$$\text{Torque reaction force} = \frac{\text{Maximum torque during acceleration and deceleration}}{\text{Radius (r)}} \text{ (kg)}$$

(6) Checking the maximum torque during acceleration and deceleration

- Make sure the maximum torque values during acceleration and deceleration (T_1 or T_3) are within the extent of the permissible torque during acceleration and deceleration (see page 4).

(7) Checking the torque during steady operations

- Be sure the maximum torque (T_2) during steady operations is within the ranges of the maximum torque diagrams.
- The output revolutions in this case are the values of N_2.

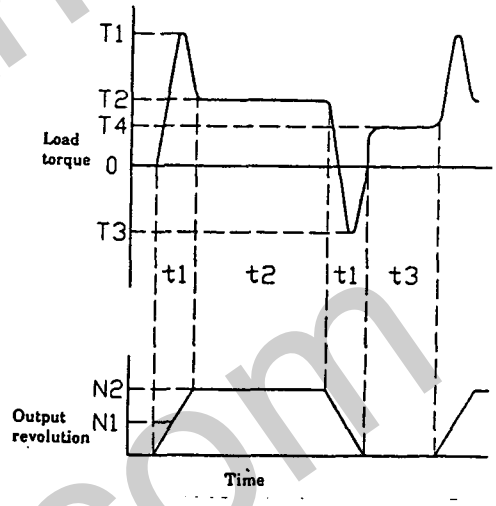

Maximum torque diagrams

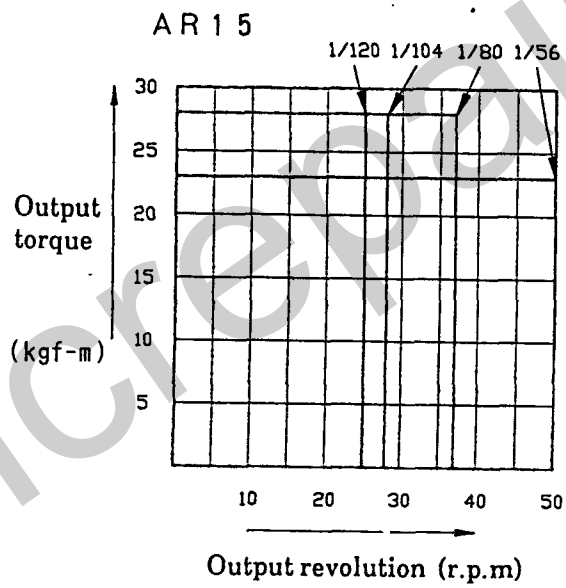

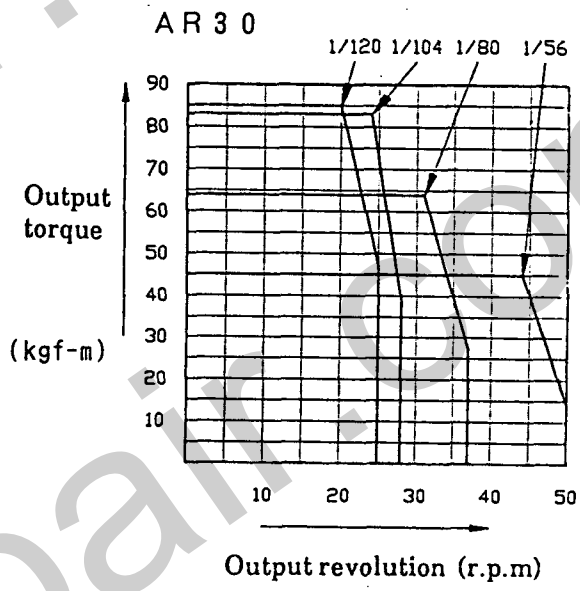

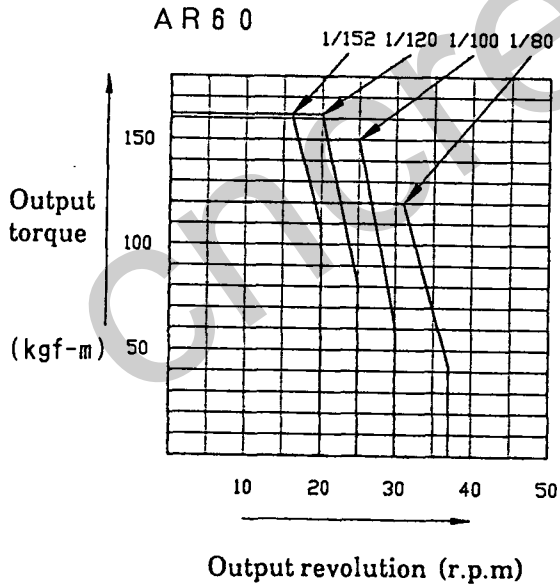

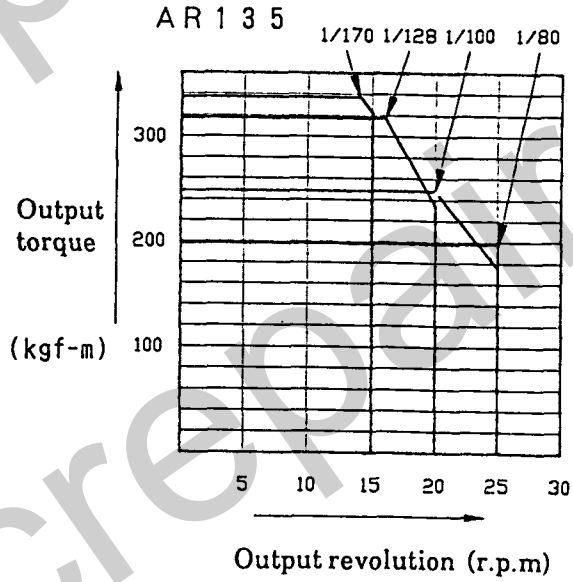

Remark)
Condition: When the case temperature is at 20°C.

(8) Checking the effective torque

◆ Calculate the effective torque (T) inclusive the period of stoppage and make sure the calculated value is within the extent of the rated output torque (see page 4).

$$T = \sqrt{\frac{t_1 \cdot T_1^2 + t_2 \cdot T_2^2 + t_1 \cdot T_3^2 + t_3 \cdot T_4^2}{2\ t_1 + t_2 + t_3}} \qquad \text{(kgf-m)}$$

(9) Checking the holding torque

◆ Torque during the survo locking period

- When holding by the survo lock, be sure the holding torque during stoppage stays within the extent of the servo lock allowable torque (see page 4).
- When holding for one minute or more with a level of torque exceeding the servo lock allowable torque (see page 4), set up the power save timer (Parameter No. P-65: refer to page 42) to actuate the holding electromagnetic brake. By servo lock, holding of upto the limits of the permissible torque during acceleration and deceleration (see page 4) is possible, but overheating occurs when held with high torque.

◆ Checking the holding brake capacity

When power supply interruption occurs, the holding electromagnetic brake will be actuated. Make sure the holding torque during power interruption stays within the extent of the holding brake force (see page 4).

(10) Checking the load GD²

◆ Check if the load GD² is within the limits of the allowable load GD².

Allowable load GD² values

Types		AR15				AR30			
Reduction gear ratio	1:R	56	80	104	120	56	80	104	120
Allowable load GD²	kgf·m²	20	42	71	95	61	125	211	282

Types		AR60				AR135			
Reduction gear ratio	1:R	80	100	120	152	80	100	128	170
Allowable load GD²	kgf·m²	303	474	682	1095	1014	1585	2596	4580

(11) Checking the regenerative brake capacity

- It is not possible to make continuous operation of the actuator, which is turned from the load side, applying regenerative braking.
- When the above procedures are needed or when accelerations and decelerations need be done frequently, it is necessary to install the external regenerative resister. Contact us in such cases.

Regenerative resistance (built-in)

Types	Resistance	Allowable heat generation
AR15 to 135	20 Ω	200 W

(12) Checking the motor shaft max. torque

- Calculate the AC servo motor shaft max. torque in the following manner and make sure the calculated value stays within the limits of the motor shaft maximum torque values.

▸ Calculation of the GD^2 at the AC servo motor shaft

$$GDm^2\,(kgf\cdot cm^2) = \frac{\text{Load } GD^2}{(R)^2} + \text{Reduction gear } GD^2 + \text{Rotor } GD^2$$

[R: Reduction gear ratio, load GD^2 : ($Kgf\cdot cm^2$)]

Types	AR15	AR30	AR60	AR135
Reduction gear GD^2 ($kgf\cdot cm^2$)	0.3	1	2	7
Rotor GD^2 ($kgf\cdot cm^2$)	13.3	39.2	94.8	317

▸ Calculation of the maximum torque at the AC servo motor shaft

① Maximum torque during acceleration (Ta_1)

$$Ta_1\,(kgf\cdot cm) = \frac{GDm^2 \times Nm}{37500 \times t_1} + \frac{T_2 \times 10^2}{0.7 \times R}$$

② Maximum torque during deceleration (Ta_2)

$$Ta_2\,(kgf\cdot cm) = \frac{T_2 \times 10^2}{0.7 \times R} - \frac{GDm^2 \times Nm}{37500 \times t_1}$$

[T_2 : Torque during the steady operation (kgf·cm)
Nm: AC servo motor revolution (r.p.m.)]

(Refer to page 14)

- Conditions for the selection

$Ta_1 \leqq$ The motor shaft maximum torque value
$Ta_2 \leqq$ The motor shaft maximum torque value

Types	AR15	AR30	AR60	AR135
Motor shaft maximum torque values (kgf·cm)	55	100	200	310

4. Explanations of the servo driver/controller

4.1 Specifications

Items	Explanations
Outlines of the functions	• For equipartition indexing by input of the index address (numbers). • The maximum 255 partitions of indexing (8 bit binary code). • Operating conditions are set up by the parameter. • The time constant during acceleration is same as that during deceleration. • Lithium batteries are built-in to back up the multiturn absolute encoder and the parameter.
Drive mode	• The drive modes consists of following modes: Selection of each of the drive modes is made by external mode selection signals (input signals). ① Automatic operation mode. (Short-cut operation or one-way operation is selected by the parameter.) ② Manual step operation mode. ③ Manual JOG operation mode. ④ Reset to zero point (origin) mode
Input signals	• External input signals needed for operation of the controller are given below: ① Operation preparation command signal 1 bit ② Servo ON signal 1 bit ③ Mode selection signal 2 bits ④ Address command signal 8 bits ⑤ Operation start signal 1 bit ⑥ Manual command CW/CCW signal 2 bits ⑦ Reset signal 1 bit ⑧ Interlock signal 1 bit ⑨ Zero point LS signal 1 bit
Output signals	• Output signals coming out from the controller are given below: ① Operation preparation ready command signal 1 bit ② Servo actuator in operation signal 1 bit ③ Positioning end signal 1 bit ④ Home position signal 1 bit ⑤ Present address indication signal 8 bits ⑥ Control alarm signal 1 bit ⑦ Controller alarm signal 1 bit ⑧ Driver alarm signal 1 bit ⑨ Battery alarm signal 1 bit
Parameter	• The main parameter setting items are given below: ① Reduction gear ratio ② The number of partitions of indexing ③ The number of gears of the sprocket ④ Operating speed (automatic and manual) ⑤ Constants during acceleration and deceleration ⑥ Position loop gain ⑦ Allowable positional deviation ⑧ The range of in-position ⑨ The number of encoder pulses ⑩ Grit shift amount ⑪ Backlash correction amount and others

4.2 Drive Mode

- The drive mode is selected by inputting the mode select signal from an external source.
- See the input signal section (on page 28) for the mode select signal.

Mode type	Explanation
Automatic operation mode	① When the operation start signal (see page 28) is input, the controller reads the address instructed from the NC/PC or sequencer. ② The controller drives the servo actuator for positioning at the instructed indexing address. ③ Upon completion of positioning, the controller outputs the positioning end signal.
Manual step operation mode (Note)	① When the manual CW signal or CCW signal (see page 28) is input, the servo actuator rotates clockwise or counterclockwise as long as the signal is input. ② When the signal input ends, the servo actuator stops after rotating to the nearest address in the rotating direction. ③ Upon completion of positioning, the controller outputs the positioning end signal.
Manual jog operation mode	① When the manual CW or CCW signal is input, the servo actuator rotates clockwise or counterclockwise as long as the signal is input. ② When the signal input ends, the servo actuator stops immediately. ③ The controller does not output the positioning end signal.
Origin return mode	**With the incremental encoder** (always performed at the time of main circuit power on) ① When the operation start signal is input, the servo actuator starts and depresses the origin limit switch installed near the indexing position. ② As the origin limit switch is depressed, the servo actuator is decelerated to the creep speed and stops at the first detected Z phase position in the rotary encoder. This position is the origin. ③ If the origin is deviated from the indexing position, correct it by inputting the grid shift (see parameter No. P-15 on page 39). ④ After the end of operation, the controller outputs the positioning end signal.
	With the absolute encoder (performed as desired) ① When the operation start signal is input, the servo actuator rotates and stops at the preset origin position. ② After the end of operation, the controller outputs the positioning end signal.

Note) In the manual step mode operation, one motion must be kept within 255 addresses. If it is desired to move beyond 255 addresses, set the manual CW or CCW signal to off once and operate again.

4.2.1 Timing chart

◆ Automatic operation modes

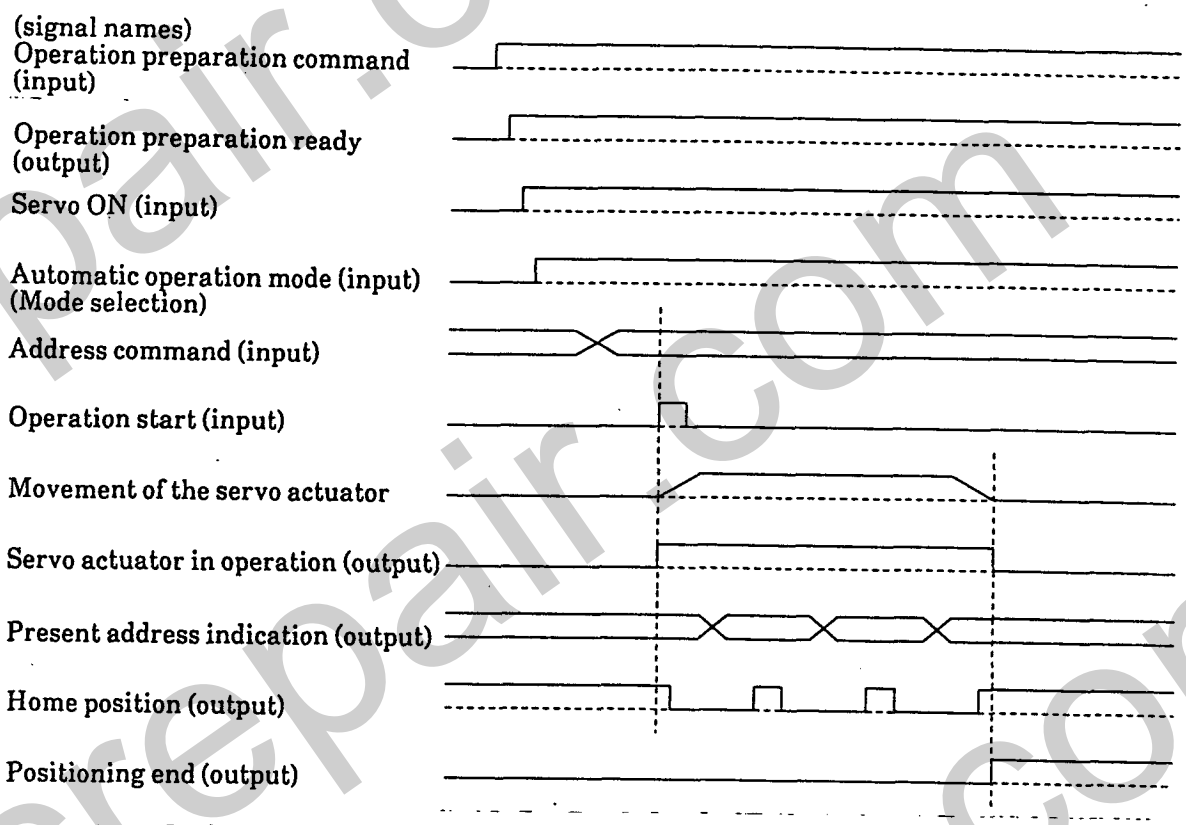

◆ Manual step modes

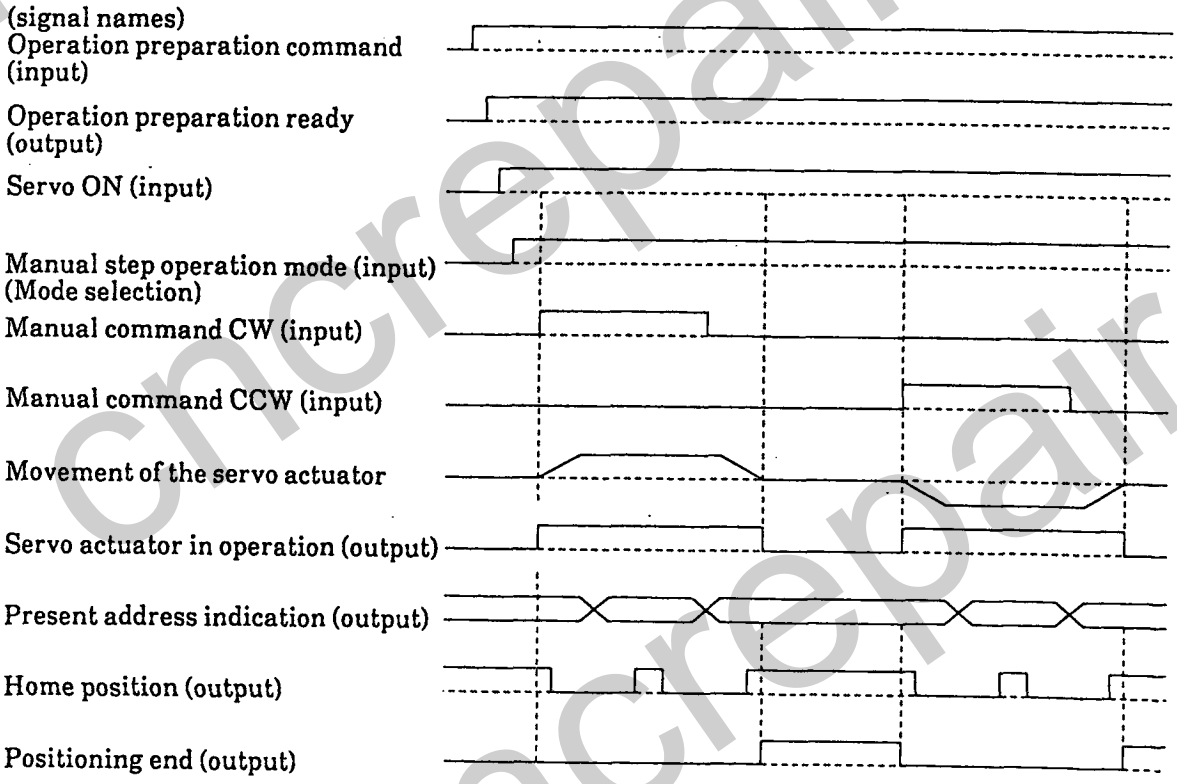

◆ Manual JOG modes

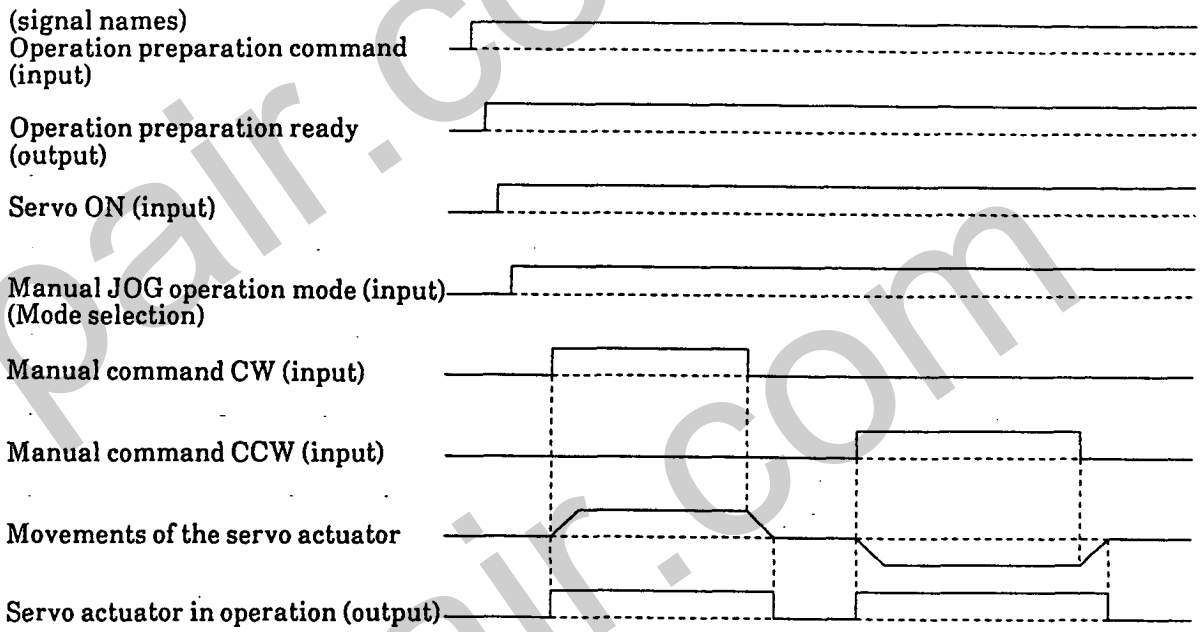

◆ Reset to zero point mode (in case of the incremental encoder)

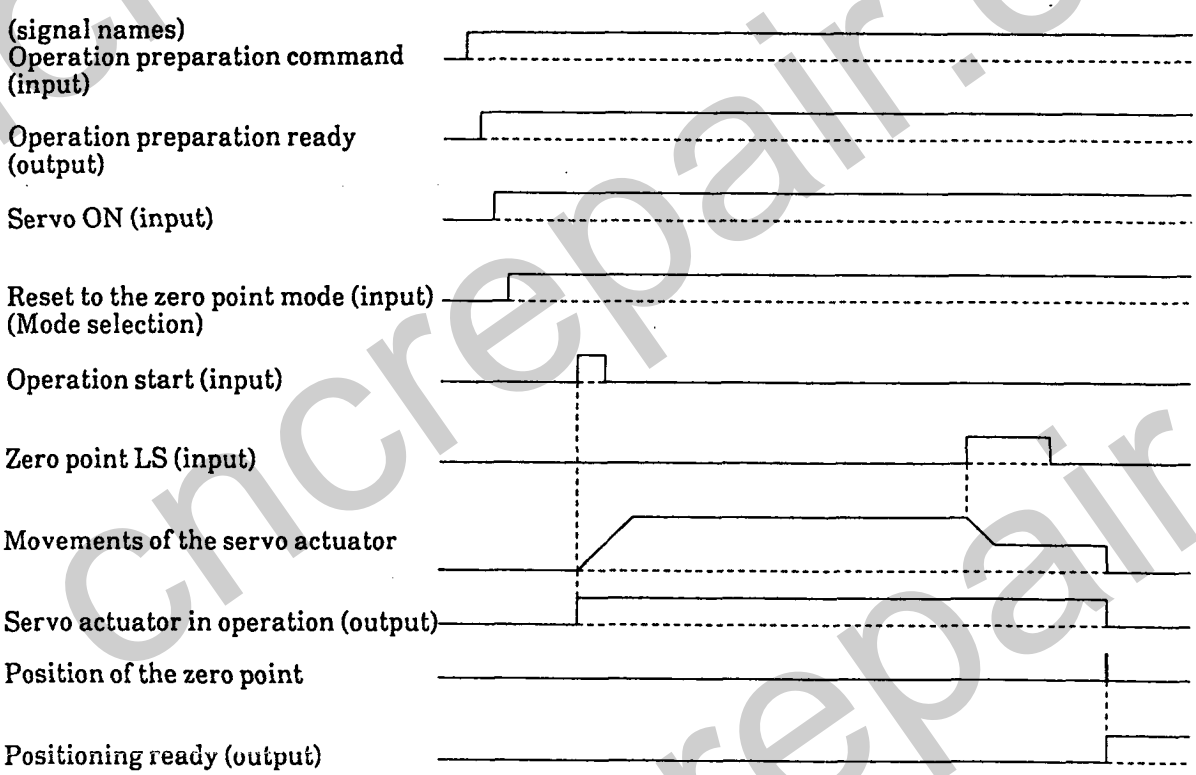

4.3 Input and output signals

4.3.1 Input signals

<table>
<tr><th>Signal names</th><th>Symbols</th><th>Explanations</th></tr>
<tr><td>Operation preparation command</td><td>PRDY</td><td>• A signal for preparations of operation.
• When this signal is entered, the power is supplied to the main circuit of the servo driver.</td></tr>
<tr><td>Servo ON</td><td>SVON</td><td>• A signal to actuate the control circuit of the servo driver. When this signal is entered, the servo actuator proceeds to the servo lock state.
• When this signal is interrupted, the holding electromagnetic brake works.
• Signals from the encoder are kept counted even if this signal is interrupted.</td></tr>
<tr><td>Mode selection</td><td>MODE A
MODE B</td><td>• A signal to select the drive mode.
<table>
<tr><th>Modes / Signals</th><th colspan="4">Drive modes</th></tr>
<tr><th></th><th>Automatic</th><th>Manual step</th><th>Manual JOG</th><th>Reset to zero point</th></tr>
<tr><td>MODE A</td><td>OFF</td><td>ON</td><td>OFF</td><td>ON</td></tr>
<tr><td>MODE B</td><td>OFF</td><td>OFF</td><td>ON</td><td>ON</td></tr>
</table>
• Selected by turning on and off the signals of Mode A and Mode B.</td></tr>
<tr><td>Address command</td><td>CMDDAT</td><td>• A signal to enter the number of the indexed address.
• The input style is 1-255 in the binary code (8 bits).</td></tr>
<tr><td>Operation start</td><td>START</td><td>• A signal to give timing for the controller to read the address command signal.
• The controller reads the address command signal during the rising edge of the operation start signal.</td></tr>
<tr><td>Manual command CW
Manual command CCW</td><td>CW
CCW</td><td>• Signals to give the operation command during step and JOG modes. (Manual)</td></tr>
<tr><td>Reset</td><td>RST</td><td>• A signal to release the output status of the control alarm and driver alarm.
• This signal is read during rising time.</td></tr>
<tr><td>Interlock</td><td>INLK</td><td>• A signal to tentatively stop the rotation of the servo actuator.
• When this signal enters during operation, the servo actuator decelerates and then stops. It resumes operation when this signal discontinues.
• Holding under servo lock status is maintained while the interlock signal is entered.</td></tr>
<tr><td>Zero point LS</td><td>REFLS</td><td>• Used for resetting to the zero point with the incremental encoder.
• A signal for the zero point limit switch is entered.</td></tr>
</table>

4.3.2 Output signals

Signal names	Symbols	Explanations
Operation preparation ready	SVRDY	• A signal outputted when operation preparations are ready for both the servo driver and controller. • When either of the servo driver and controller is not ready for operation, this signal is not outputted. Also, when an alarm is actuated, this signal will be interrupted.
Servo actuator in operation	MOV	• Outputted when the servo actuator is in operation.
Positioning ready	CNTUP	• A signal outputted when the positioning is ready. • The signal is outputted when positioning is ready during automatic operation, manual step operation and reset to zero point mode. • The positioning ready signal turns on when the positioning action is completed, and it turns off when the action starts.
Home position	IDPOS	• Signals outputted when positioning is being made or each time an address passes the indexed position. • Home position signals are provided with each of the addresses. • The extent of the home position signals is set up by the parameter number P-12 (see page 38).
Present address indication	SPDAT	• A signal to output the present address number for indication of the present address. • The output style is 1-255 in binary code (8 bits) • With the multiturn absolute encoder, present address is displayed starting from the time of application of the power source. • With the incremental encoder, the indication is displayed after reset to the zero point.
Control alarm	SALM	• A signal outputted when abnormalities occur in controls. • The alarm may be released by the reset signal. • The content of the alarm is displayed at LED 4 on the controller.
Controller alarm	CALM	• A signal outputted when abnormalities occur in the hardware proper of the controller. • When this alarm is actuated, the CPUAL on the controller lights. • This signal may not be turned off by entering the reset signal.
Driver alarm	DALM	• A signal outputted when abnormalities occur in the servo driver. • The content of the alarm is indicated by figures in the LED5 on the servo driver.
Battery alarm (Battery)	BALM	• A signal outputted when the voltage of the back up driver drops. • When this alarm is actuated, the BATAL on the controller lights.

4.3.3 Input signal specifications

Input signals (DC) mean signals coming from external sources such as signals coming from pushbuttons, limit switches,etc. (All the input signals are insulated by photo-couplers.)

- Regardless if the signals are from contacts or not, following conditions must be satisfied:
  ① Capacity: DC30V 16mA or more
  ② Leak current during cutoff: 1mA or less (26.4V of voltage)
  ③ Voltage drop when turned on: 1V or less (approx. 13mA of current)
- Input signal waveform: The chattering time and holding time should be with the following characteristics during operations:
  ① Input signal allowable chattering time: T < 5 m sec
  ② Input signal holding time: 10 m sec < T < 20 m sec
  (These are because the delay time after receiving an input signal till the operation starts is more than 5 m sec. and less than 10 m sec.)
- Input circuits
  The input circuits are shown below:

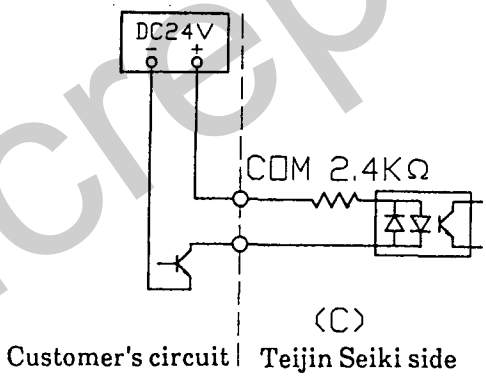

In case of 24V common

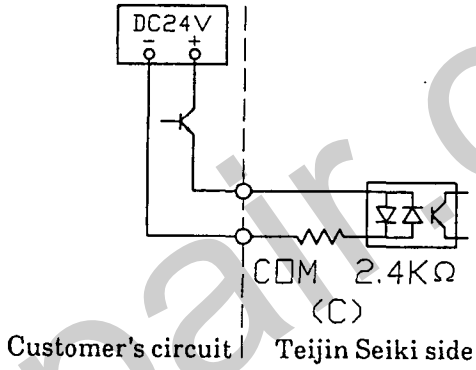

In case of 0V common

- Power supply should be prepared by the customer:
  DC24V ±1V Approx. 2A (power supply for input and output signals)
  Remarks:
  - The F.G (frame ground) of the power supply should be connected to the frame ground of the driver.
  - Separate sources of power should be prepared for the input and output signal power and the brake power.

4.3.4 Output signal specifications

The output signals (DC) are for actuating external relays and light emitting diodes.
(All the output signals are insulated by photo-couplers.)

- Ratings of the output transistors should be as follows:
  Applied voltage (Vmax) ≦ 30V
  Conducted current 1 (1P) ≦ 60 mA
- For an inductive load (such as external relays), always connect a diode (with the permissible voltage of 100V or more and current 100mA or more).
  Make very sure that the polarity is correct, as otherwise the internal circuit will be damaged.

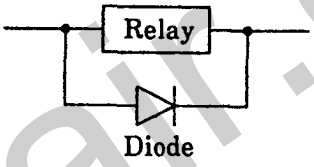

- For a capacitive load (such as lamps), be sure to connect a protective resistor in series with the load to restrict rush current.
  Be sure that the max. current including instantaneous cases is restricted within the conductive current range as specified above.

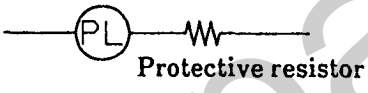

- Output circuits
  Output circuits are shown below:
  (The DC 24V power supply should be prepared by the customer.) (See page 30)

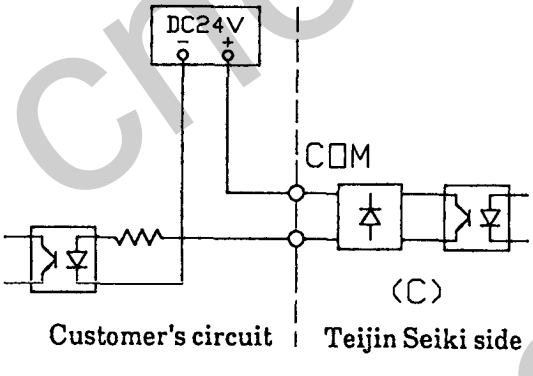

In case of 24V common

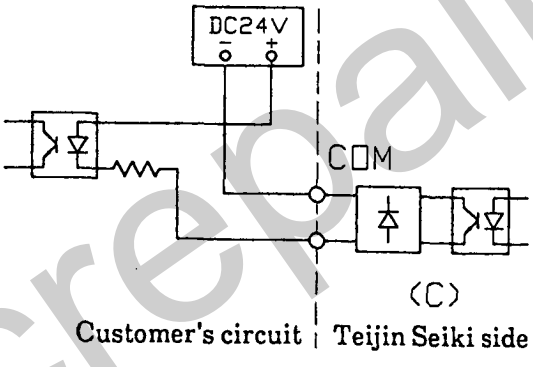

In case of 0V common

4.4 Explanations and setting up of the parameter

The parameter is used to set up the operating conditions and to check each of the control status during operations.

4.4.1 Outline of the parameter

Parameter numbers	Outlines
P-1 tp P-21	Items for parameter settings [• Reduction gear ratio • Time constant • Number of indexing • Loop gain • operating speed and others]
P-60 tp P-69	Items for parameter selections [• Selection of the encoder • With or without interlocks • Selection between short-cut operation or one-way operation • Direction of indexing and others]
P-70 tp P-79	• Indication of the input and output signal status • Indication of the multiturn absolute encoder alarm status
P-80 tp P-99	• Indication of the contents of the timer and DA converter register • Indication of the present coordinate value (pulse) • Indication of the error pulse

* For details of the parameter, refer to page 37 and after.

4.4.2 Setting the parameter

- On the controller, the display (LED4) and push-button switches (PB2) are provided as shown below.
- By pressing the push-button switches (PB2), the parameter settings may be checked or modified.

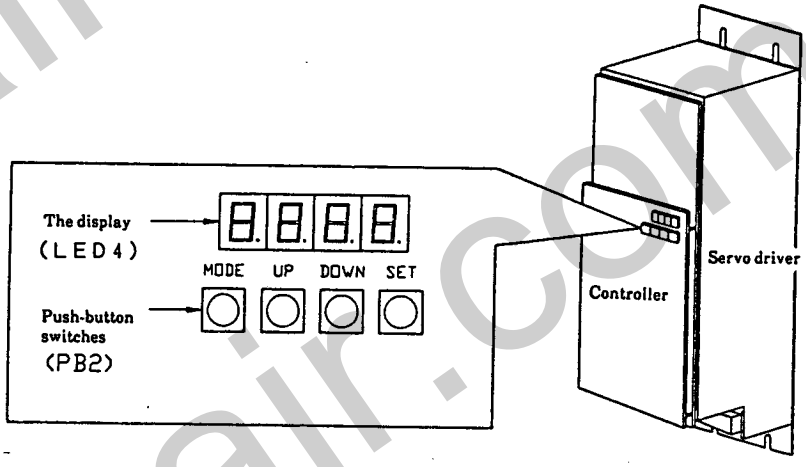

(1) Normal displays

- In the display (LED4), the present address is indicated.

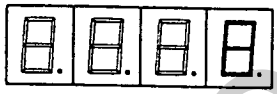

- Indications to the right are displayed during setting procedures or, with the incremental type, before resetting to zero point.

(2) Initialization

- When operating for the first time after installation, it is necessary to initialize the parameter.
- For details of the initialization values, refer to the parameter setting items (page 37 and after).
- When using, the setting values should be modified to meet with the specifications of the customer.

Procedures for the initialization

① Press the four switches simultaneously till the display (LED4) indicates [8][8][8][8] .

② Press the MODE, DOWN, and SET switches simultaneously for over 1 min. and the display (LED4) will indicate [H][H][H][H] .
(Remark)

③ At the time when [H][H][H][H] indication appears in the display (LED4), the initialization of the parameter is completed.

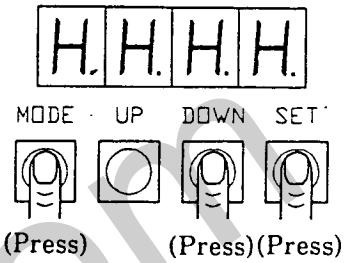

(Remark)
[H][H][H][H] will be indicated instantaneously.

4.4.3 Checking and changing the parameter settings

- When checking and changing parameter settings, follow the procedures below:
- When discontinuing operations, release the push-button switch (PB2)

  The indications in the LED4 will be automatically reset to the present address indication, 30 minutes later.

When continuous indications of the parameter settings are needed, operate the parameter No. P-68 (see page 43).

(1) • When changing the parameter setting, press the 4 switches simultaneously will the display (LED4) indicates 8 8 8 8 .

• This operation is not necessary for checking.

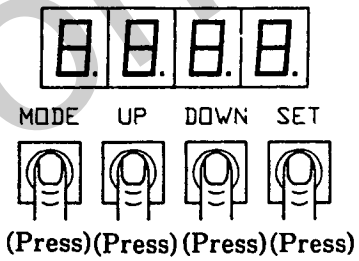

(2) Press the MODE button and present parameter number will be indicated.

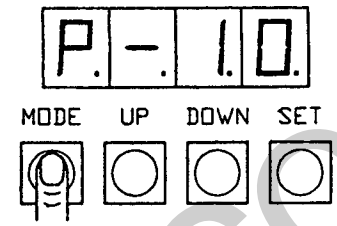

(3) When raising the parameter number:
① Press the UP button while keeping pressing the MODE button, and the parameter number goes up one by one.
② Keep pressing the MODE and UP buttons simultaneously, and the parameter number goes up continuously.

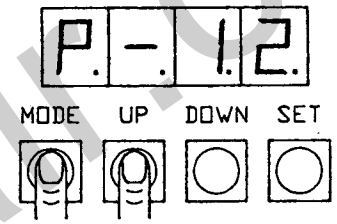

(4) When bringing down the parameter number:
① Press the DOWN button while keeping pressing the MODE button, and the parameter number comes down one by one.
② Keep pressing the MODE and DOWN buttons simultaneously and the parameter number comes down continuously.

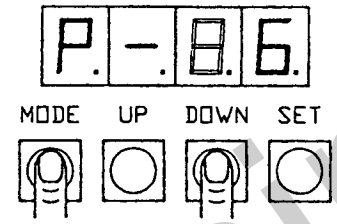

(5) Indication of the parameter setting
• When selection of the parameter number is completed, the parameter setting is indicated in 0.5 sec. later

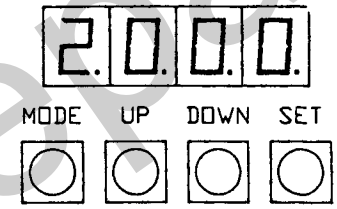

(6) To increase the setting value

① Press the UP switch and the set value is incremented by one at a time.

② Keep the UP switch pressed and the set value is incremented successively.

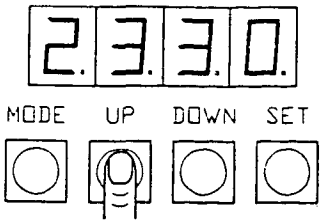

(Press)

(7) To decrease the setting value

① Press the DOWN switch and the set value is decremented by one at a time.

② Keep the DOWN switch pressed and the set value is decremented successively.

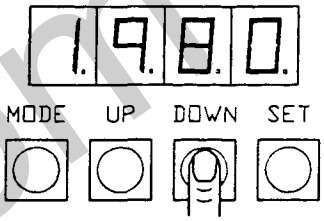

(Press)

(8) To store the setting value

① Keep the SET switch pressed until the display (4 LEDS) indicates | H | H | H | H | . (Remark)

② The new setting value is stored when the display (4 LEDS) changes | H | H | H | H | .

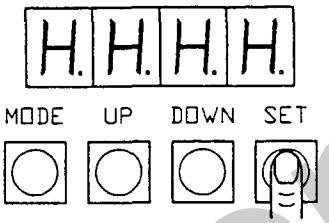

(Press)

(9) To end modification of the set value

- When the set value is modified, turn the main circuit power off once and turn it on again.
- The parameter setting value is not validated unless the main circuit power is turned on again.

(Remark)
| H | H | H | H | will be indicated instantaneously.

4.4.4 Setting the Absolute Encoder Coordinate Origin

- This operation is for adjusting the origin of the absolute encoder.
- The machine origin is the state where the machine is positioned at index No. 1.
- Set the coordinate origin of the absolute encoder after setting the machine origin.

Method for setting the machine origin

① Keep the four switches pressed at the same time until the display (four LEDs) indicates | 8 | 8 | 8 | 8 | .

② Press the UP and DOWN switches at the same time for 1 second or more and the display (four LEDs) changes to | H | H | H | H | to indicate the end of coordinate origin setting for the absolute encoder.

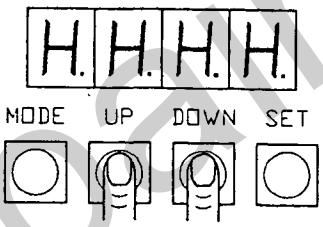

(Press) (Press)

Note) If the parameters are not set in the absolute expression in the operation above, an alarm will result. [See parameters No. P-13 (on page 38) and No. P-60 (on page 42).]

4.4.5 Items of parameter setting

Parameter numbers	Contents of the parameter	Setting ranges	Initialization values
P-0	Present address indication		
P-1	Reduction gear ratio (R)(1:R) ● Enter the reduction gear ratio of the servo actuator. ● When reducing the speed of the servo actuator output shaft further, enter the overall reduction gear ratio. (Example) 1/120×1/2=1/240 (Enter "240")	Reduction gear ratios for each type AR15: 56, 80, 104, 120 AR30: 56, 80, 104, 120 AR60: 80, 100, 120, 152 AR135: 80, 100, 128, 170	120
P-2	Number of indexing ● Enter the number of indexing. (Example) - When indexing one turn of the table to 10 equipartitions. Enter "10" - In case of 60 units of ATC tool magazine Enter "60"	Setting range 2 to 255	15
P-3	Number of gears of the sprocket ● Enter the number of gears of the sprocket. ● When the sprocket is not used, enter the number of indexing.	Setting range 2 to 255	15
P-4	Automatic operation speed (r.p.m.) ● Enter servo motor revolution during automatic operations.	Setting range AR15 to 60 50 to 3000 AR135 50 to 2500	2000
P-5	Acceleration and deceleration time constant during automatic operations (m sec) ● Enter acceleration and deceleration time during automatic operations.	Setting range 50 to 1000 (The acceleration time constant is same as the deceleration time constant.)	500
P-6	Manual operation speed (r.p.m.) ● Enter the revolution of the servo motor during manual operations. ● Step, JOG and Reset to zero point modes.	Setting range AR15 to 60 50 to 3000 AR135 50 to 2500	1000
P-7	Acceleration and deceleration time constant during manual operations (m sec) ● Enter acceleration and deceleration time during manual operations.	Setting range 50 to 1000 (The acceleration time constant is same as the deceleration time constant.)	500

Parameter numbers	Contents of the parameter	Setting ranges	Initialization values
P-8	Creep speed during resetting to zero point (r.p.m.) • Used for resetting to zero point with the incremental type. • This is the rotating speed after stepping on the zero point limit switch.	Setting range 50 to 200	50
P-9	Position loop gain [Kp](sec^{-1}) • Select the optimum loop gain. • Converted as 0.01 sec^{-1} = 1	Setting range 1000 to 5000 (10 to 50 sec^{-1}) Kp = 20 should be entered as "2000".	2000 (20sec^{-1})
P-10	Allowable positional deviations (pulse) • Means the max. follow-up errors during rotation. • Set to the value obtained from the following equation or more: $\frac{\text{Used max. revolution of the servo motor} \times \text{Pulse number of the encoder} \times 1.5}{Kp \times 600}$	Setting range 0 to 2048	512
P-11	Range of in-position (pulse) • Means the range of positionings. • The positioning ready signal is outputted when positioned within the range of in-position.	Setting range (T) 10 to 9999 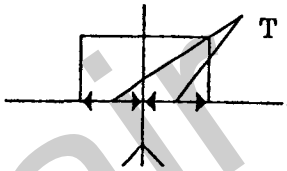 Command position	100
P-12	Range of the home position signal (pulse) • This signal is outputted at each address. • The range of this signal (L) should be wider than the range of in-position, and less than 1/4 pitch. (1 pitch = distance between an address to the next address)	Setting range (L) 10 to 9999 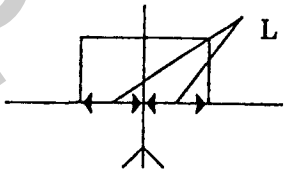 Command position (L>T)	200
P-13	Number of the encoder pulse (pulse) • Enter the number of pulse for one rotation of the encoder.	Incremental type 2500 Multiturn absolute type 2048	2048

Parameter numbers	Contents of the parameter	Setting ranges	Initialization values
P-14	Coordinate figures of zero point in one rotation of the multiturn absolute encoder (pulse) • Indicated the coordinate figures of zero point in one rotation of the encoder. • When renewing the printed circuit board and ROM, record the previous P-14 figures, and after renewal, set the figures to parameter No. P-14. • Renewing may be done without changing the origin of coordinates.	Setting range 0 to 2047	—
P-15	Grit shift value (pulse) • Means error adjustment value between zero points of the servo actuator and of the machine. • Calculate the movement amount (min.) at the output shaft by the following formula: $\frac{\text{Grit shift value} \times 360 \times 60}{\text{Number of encoder pulse} \times \text{Reduction gear ratio}}$	Setting range 0 to 9999	0
P-16	Backlash correction value (pulse) • This is used for correction of errors caused by backlash with either of CW rotation or CCW rotation. • Calculate the movement amount (min.) at the servo actuator output shaft by the following formula: $\frac{\text{Backlash correction value} \times 360 \times 60}{\text{Number of encoder pulse} \times \text{Reduction gear ratio}}$	Setting range 0 to 9999	0
P-17	Step feeding amount (pulse) • This is used in the optional step feeding mode (see page 43) and in the local mode (see page 44). • Calculate the movement amount (min.) at the servo actuator output shaft by the following formula: $\frac{\text{Step feeding amount} \times 360 \times 60}{\text{Number of encoder pulse} \times \text{Reduction gear ratio}}$	Setting range 1 to 9999	50

Parameter numbers	Contents of the parameter	Setting ranges	Initialization values
P-18	CW rotation side stroke limit • This is used when there is a stroke end. • 10,000 pulses should be converted to 1. • With the multiturn absolute type, a limit setting value of the stroke limit, in accordance with the operating conditions, will be displayed in the LED4. Setting should be made to a value equal to or less than this value.	• Setting range with the incremental type 1 to 9999 (10,000 to 99,990,000 pulses) • Setting range with the multiturn absolute type Set to a value equal to or less than the initialization value.	— Remark)
P-19	CCW rotation side stroke limit • This is used when there is a stroke end. • 10,000 pulses are converted to 1. • With the multiturn absolute type, a limit setting value of the stroke limit, in accordance with the operating conditions, will be displayed in the LED4. Setting should be made equal to or less than this value.	• Setting range with the incremental type 1 to 9999 (10,000 to 99,990,000 pulses) • Setting range with the multiturn absolute type Set to a value equal to or less than the initialization value.	— Remark)
P-20	Power save timer (sec) • Used to avoid useless heat generation of the motor, when interrupting for long time. • When it comes to the setting time in the power save timer, the servo ON signal turns off automatically and the built-in holding electromagnetic brake works. Meanwhile, when the operation start signal enters, the electromagnetic brake is released and the operation is resumed. • The servo lock holds during the set time. • Select use of the power save timer by parameter No. P-65 (in page 42).	Setting range 30 to 9999	30

Remark)

The initialization value is indicated in the LED4 even if parameter No. P-18 and P-19 are not used, but do not change the initialization value when not using them.

① Incremental type : 9999 are indicated in the LED4.

② Multiturn absolute type : the limit setting value of the stroke limit is automatically calculated and displayed in the LED4.

Parameter numbers	Contents of the parameter	Setting ranges	Initialization values
P-21	Overshoot (pulse) ● When the abrasion load is large, the servo lock holding torque may increase or positioning accuracy may deteriorate by mechanical distortions. ● In such cases, make overshooting. ● Set up the optimum overshoot checking the holding torque (electric current value).	Setting range (A) 0 to 9999 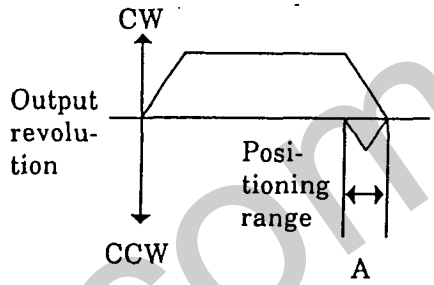 	0

4.4.6 Items of parameter selections

Parameter numbers	Contents of parameter selections	Indications in LED4	Initialization values
P-60	Selection between the multiturn absolute type and incremental type (Remark)		0000
	• Multiturn absolute encoder with the coordinate shifting function	0000	
	• Multiturn absolute encoder without the coordinate shifting function (The coordinate shifting function is used when making positioning with the endless rotation.)	0010	
	• Incremental encoder with the zero point resetting direction in (Remark) CW rotation.	0001	
	• Incremental encoder with the zero point resetting direction in (Remark) CCW rotation.	0011	
P-61	Selecting the direction in which the number of the indexed address goes up.		0000
	• In case the order of numbering the indexed addresses is (Remark) counterclockwise (CCW).	0000	
	• In case the order of numbering the indexed addresses is (Remark) clockwise (CW).	0001	
P-62	Selection of interlock signals		0001
	• When not using the interlock signal.	0001	
	• When the interlock signal is A-contact input.	1001	
	• When the interlock signal is B-contact input.	1101	
P-63	Selection between short-cut indexing and one-way indexing		0000
	• Short-cut indexing	0000	
	• Finite indexing (when there is a stroke end)	0001	
	• One-way indexing (CW rotation)	0010	
	• One-way indexing (CCW rotation)	0011	
P-64	Selecting the indexing direction with a 2-position indexing		0000
	• (Address No. 1)→CW rotation→(Add. No. 2)→ CCW rotation→(Add. No. 1)	0000	
	• (Add. No. 1)→CCW rotation→(Add. No. 2)→ CW rotation→(Add. No. 1) → (In case of one-way indexing, make out the setting by use of parameter No. P-63.	0001	
P-65	Selecting use of the power save timer (Parameter No. P-20, in page 40)		0000
	• Not using the power save timer.	0000	
	• Using the power save timer.	0001	

Remarks:

① See page 2 for the direction of rotation.

② By use of the coordinate shifting function, endless indexing may be made without mechanical restrictions of reduction gear ratio, number of indexing and number of gears of sprocket.

Parameter numbers	Contents of parameter selections	Indications in LED4	Initialization values
P-66	Selection of the direction of backlash correction and the direction of grid shift Select the direction of rotation of backlash correction and of grid shift. Parameter display (LED4) (Remark: See page 2 for the direction of rotation.) Grid shift — CW rotation 0 CCW rotation 1 Backlash correction — CW rotation 0 CCW rotation 1 Remark: When not using the backlash correction and grid shift, set the parameter No. P15 and P16 to 0.		0000
P-67	Selection of the optional step feeding mode • By selecting this mode, feeding by the pulse pitch set up by the parameter No. P-17 becomes possible during manual step operation mode (See Page 25). • This is effective when minute step feeing is needed. ① Not selecting the optional step feeding. ② Selecting the optional step feeding. Remarks: 1. This mode is not related to the local mode (Parameter No. P-69). 2. This mode is canceled when the power is supplied, resetting is being made and when the coordinate origin is being set (see page 36).	0000 0001	0000
P-68	Selecting external outputting of the alarm number and the indicating time of parameter setting figures Parameter display (LED4) Parameter setting figures 30 second indication 0 Continuous indication 1 (Outputting the alarm number externally) Not outputting 0 Outputting 1 Cont.		0000

Parameter numbers	Contents of parameter selections	Indications in LED4	Initialization values
P-68	1. Selecting the indicating time of parameter setting figures (30 second indication means: Indicated for 30 seconds after push-buttons are pressed, before changing to indication of the present address.) 2. Selecting if outputting the alarm number (see page 77) externally (When outputting the alarm number externally, use present address indication signals (see page 29).		0000
P-69	Selection of the local mode • The local mode is for manual operation by use of push-button switches (PB2) on the controller. • It is used when making adjustments or at the time of test operations. • Operations may be carried out skipping the input and output signal lines (CN6). ① Not using the local mode. ② Selecting the JOG operation of the local mode. ③ Selecting the step operation of the local mode. [1 pitch (to the next address) feeding] ④ Selecting the minute step operation of the local mode. [Feeding in the set-up amount by Parameter No. P-17] Methods of operation ① When UP of the push-button switches (PB2) is pressed, it rotates clockwise (CW). ② When DOWN of the push-button switches (PB2) is pressed, it rotates counter-clockwise (CCW). (Remark: See page 2 for the direction of rotation.) • Parameter indication During operation, the parameter display (LED4) indicates the index address after "L". • Releasing The local mode is released by simultaneously pressing MODE and SET of the push-button switches (PB2).	0000 0001 0010 0011	0000

4.4.7 Status indications by parameters

When following parameter numbers are designated, status of the input and output signals (CN6) and alarm status of the multiturn absolute encoder are indicated in the parameter display (LED4).

Parameter numbers	Contents of indications (LED4)
P-70	Input signals CMDDAT 4 | CMDDAT 3 | CMDDAT 2 | CMDDAT 1
P-71	Input signals CMDDAT 8 | CMDDAT 7 | CMDDAT 6 | CMDDAT 5
P-72	Input signals INLK | START | CCW | CW
P-73	Input signals PRDY | SVON | MODE B | MODE A
P-74	Input signals [ ] | [ ] | REFLS | CN6-37
P-75	Output signals SPDAT 4 | SPDAT 3 | SPDAT 2 | SPDAT 1
P-76	Output signals SPDAT 8 | SPDAT 7 | SPDAT 6 | SPDAT 5
P-77	Output signals MOV | CNTUP | IDPOS | SALM
P-78	Indicates alarm status of the multiturn absolute encoder. ENALM (If in the alarm status or not) | BATALM1 (Battery voltage drop) | BATALM2 (Built-in capacitor voltage drop) | CNTOVF (Counter overflow)
P-79	

Display (LED4)

CMDDAT 1
CMDDAT 2
CMDDAT 3
CMDDAT 4
CMDDAT 5
CMDDAT 6
CMDDAT 7
CMDDAT 8
} Address command signals

CW : Manual command CW signal
CCW : Manual command CCW signal
START : Operation start signal
INLK : Interlock signal
MODE A : Mode selection signals
MODE B :
SVON : Servo ON signal
PRDY : Operation preparation command signal
REFLS : Zero point LS signal

Output signals

SPDAT 1
SPDAT 2
SPDAT 3
SPDAT 4
SPDAT 5
SPDAT 6
SPDAT 7
SPDAT 8
} Present address indication signals

SALM : Control alarm signal
IDPOS : Home position signal
CNTUP : Positioning ready signal
MOV : Servo actuator in operation signal

Parameter numbers	Contents
P-80	Indicates contents of timer 0 register (0.5 μsec)
P-81	Indicates contents of timer 1 register (0.5 μsec)
P-82	Indicates contents of timer 2 register (0.5 μsec)
P-83	Indicates contents of timer 3 register (20 msec)
P-84	Indicates contents of timer 4 register (1 sec)
P-85	Blank
P-86	Blank
P-87	Blank
P-88	Blank
P-89	Operation mode indication
P-90	DA converter reference voltage register
P-91	Indicates DA converter register
P-92	Indicates DA converter register
P-93	Indicates DA converter output register
P-94	Indicates DA converter output register
P-95	Indicates error pulse
P-96	Indicates the present coordinate value (of lower range)
P-97	Indicates the present coordinate value (of middle range)
P-98	Indicates the present coordinate value (of higher range)
P-99	Indicates the program version

4.5 Contents of the servo driver

- With the standard spec. equipment, the input and output signal lines of the servo driver are connected to the controller internally.
- When not using the controller of the AR series, use the input and output signal line connector (CN1) for the connection.

4.5.1 Specifications

Types				AR15D	AR30D	AR60D	AR135D
Basic specifications	Control method			Transistor PWM controls			
	Input power supply	Main circuit and control circuit		Three-phase AC 200 - 220V ±10% 50/60Hz			
		Power supply capacity	KVA	0.8	1.2	1.8	3.5
	Continuous output current		Arms	3.0	4.6	8.0	16
	Max. output current		Arms	11	17	28	42
Speed and position sensor			P/rev	Incremental type 2500 and multiturn absolute type 2048			
Input signals to the driver	External power for input signals			DC24V or DC5V			
	Speed input command	Voltage of commands		DC±3V=1000 r.p.m., MAX±10V			
		Input impedance		About 20 K ohms			
	Input signals			Operation preparation command, servo ON, proportional control action command, CW/CCW rotation prohibition command, torque mode command, CW/CCW rotation side torque control and resetting			
Output signals from the driver	Position output signals			A-phase, B-phase and Z-phase			
	Output signals			Operation preparation ready and servo alarm			
	Monitor output signals			Torque monitor: ±3V = rated torque ±10%			
				Speed command monitor: ±2.4V=1000 r.p.m. ±10%			
				Speed monitor: ±2.4V=1000 r.p.m. ±10%			
Others	Built-in power supply (for output)			DC±15V·30mA, DC+5V·30mA			
	Built-in functions			Dynamic brake and regenerative resistor			
	Protection functions			Excess current, over-voltage, low-voltage, over-load, over-heating, NFB trip, abnormalities in 5V power, open signal lines, open power lines and abnormalities in the circuits. (When an alarm for any of above is actuated, the dynamic brake works to make an emergency stop.)			
	Structure			Base mount			
	Weight			Approx. 9 kgs			
	Environments			Operating temperature: 0 to 50°C Storing temperature: −20 to +85°C Humidity: 80%RH or less (Dew condensation should not occur.)			

4.5.3 Servo driver input signals
(CN1a Connector pins for input and output signals)

Signal names	Symbols	Pin numbers	Contents
Operation preparation command	PRDY	22	• A signal for preparations of operation • When this signal enters, the power is supplied to the main circuit of the servo driver.
Servo ON	SVON	23	• A signal to actuate the control circuit of the servo driver • When this signal enters, the holding electromagnetic brake is released and it goes to a status of pending the speed input command.
Speed input command	VCMD EC	12 13	• A signal to input the speed command by voltage. • It becomes ± 1000 rpm by a ± 3V input. • Short-circuit the pin No. 13 and pin No. 14.
Proportional control action command	PCON	38	• A signal to reduce the speed loop gain to about 1/10 (28db) of the normal state. • It is useful for prevention of servo actuator rotation by temperature drifts, and for prevention of heat generation of the servo actuator when pried from outside like when inserting the knock pins.
CW rotation prohibition command CCW rotation prohibition command	POT NOT	24 40	• Signals to prohibit CW rotation and CCW rotation by signals from the ultimate limit switch. • Keep it "open" during operations and "close" it while the ultimate limit switch is working. • The servo actuator keeps rotating by inertia. Make the speed command "0" to stop it.
CW rotation side torque control CCW rotation side torque control	PCL NCL	28 44	• A signal to control the max. torque (Max. output current) by voltage. • It becomes the rated torque (continuous output current) by a ±3V input. (Max. ±10V input)
Reset	RST	41	• A signal to release the alarm state.
Torque mode command	V/T	39	• A signal to change the speed input command to torque input command.
Input signal operating power supply		• External power supply for pins Nos. 22, 23, 24, 39 and 40. • Select either 24V or 5V.	
	+24V 1N	7	• Prepare a DC24V power supply.
	+5V 1N	6	• Prepare a DC5V power supply.

4.5.4 Servo driver output signals
(CN1a connector pins for the input and output signals)

Signal names	Symbols	Pin numbers	Contents
Operation preparation ready	RDY+ RDY−	26 27	• A signal outputted when the main circuit power is applied and when the preparations for operation are ready. This signal is "closed" when outputted.
Servo alarm	AL+ AL−	42 43	• A signal outputted when abnormalities are detected in the servo driver. This signal is "closed" when outputted.
± 15V power supply	+15V AGND −15V	15, 16 11, 14, 17, 18, 29, 45, 49, 50, 47, 48	• Built-in power supply for commands. ±15V ± 5%; Max. output current 30mA
+ 5V power supply	+5V DGND	33, 34, 35 1, 2, 3	• Built-in power supply. + 5V ± 5%; Max. output current 30 mA Remark: With the multiturn absolute type, pin numbers are 1 and 33 only.
Torque monitor	TRM	8	± 3V = Rated torque ±10%
Speed monitor	VFM	10	±2.4V=±1000 r.p.m. ±10%
Speed command monitor	VCM	9	±2.4V=±1000 r.p.m. ±10%
Position signal Output A-phase Position signa Output B-phase Position signal Output Z-phase	 PA PA * PB PB * PZ PZ *	 4 5 20 21 36 37	Output signals of encoder. Outputted by the line driver AM26LS31. To be received by the line receiver AM26LS32.

4.5.6 CN1a Connectors for input and output signals

Multiturn absolute encoder

1	2	3	4	5	6	7	8	9	10	11	12	13	14	15	16	17	18
DGND			PA	*PA	+5V IN	+24V IN	TRM	VCM	VFM	AGND	VCMD	EC	AGND	+15V	+15V	AGND	AGND

19	20	21	22	23	24	25	26	27	28	29	30	31	32
	PB	*PB	PRDY	SVON	POT		RDY+	RDY-	PCL	AGND			

33	34	35	36	37	38	39	40	41	42	43	44	45	46	47	48	49	50
5V			PZ	*PZ	PCON	V/T	NOT	RST	AL+	AL-	NCL	AGND		-15V	-15V	AGND	F.G

Incremental encoder

1	2	3	4	5	6	7	8	9	10	11	12	13	14	15	16	17	18
DGND	DGND	DGND	PA	*PA	+5V IN	+24V IN	TRM	VCM	VFM	AGND	VCMD	EC	AGND	+15V	+15V	AGND	AGND

19	20	21	22	23	24	25	26	27	28	29	30	31	32
	PB	*PB	PRDY	SVON	POT		RDY+	RDY-	PCL	AGND		EMG+	EMG-

33	34	35	36	37	38	39	40	41	42	43	44	45	46	47	48	49	50
5V	5V	5V	PZ	*PZ	PCON	V/T	NOT	RST	AL+	AL-	NCL	AGND		-15V	-15V	AGND	F.G

4.5.7 Types of the connector and plugs

Type of connector (CN1a)	Applicable plug types (CN1b)			
	Soldered type	Caulked type	Case	Name of manufacturer
MR50RMA Right angle 50P	MR-50F	MRP-50F01	MR-50L	Honda Tsusin Kogyo Co., Ltd.

4.6 Adjustment of the servo driver

- The standard spec. equipment with the controller is already adjusted before shipment.
- When not using the controller of the AR series, make adjustments in the following procedures.

4.6.1 Layouts of adjusting sections

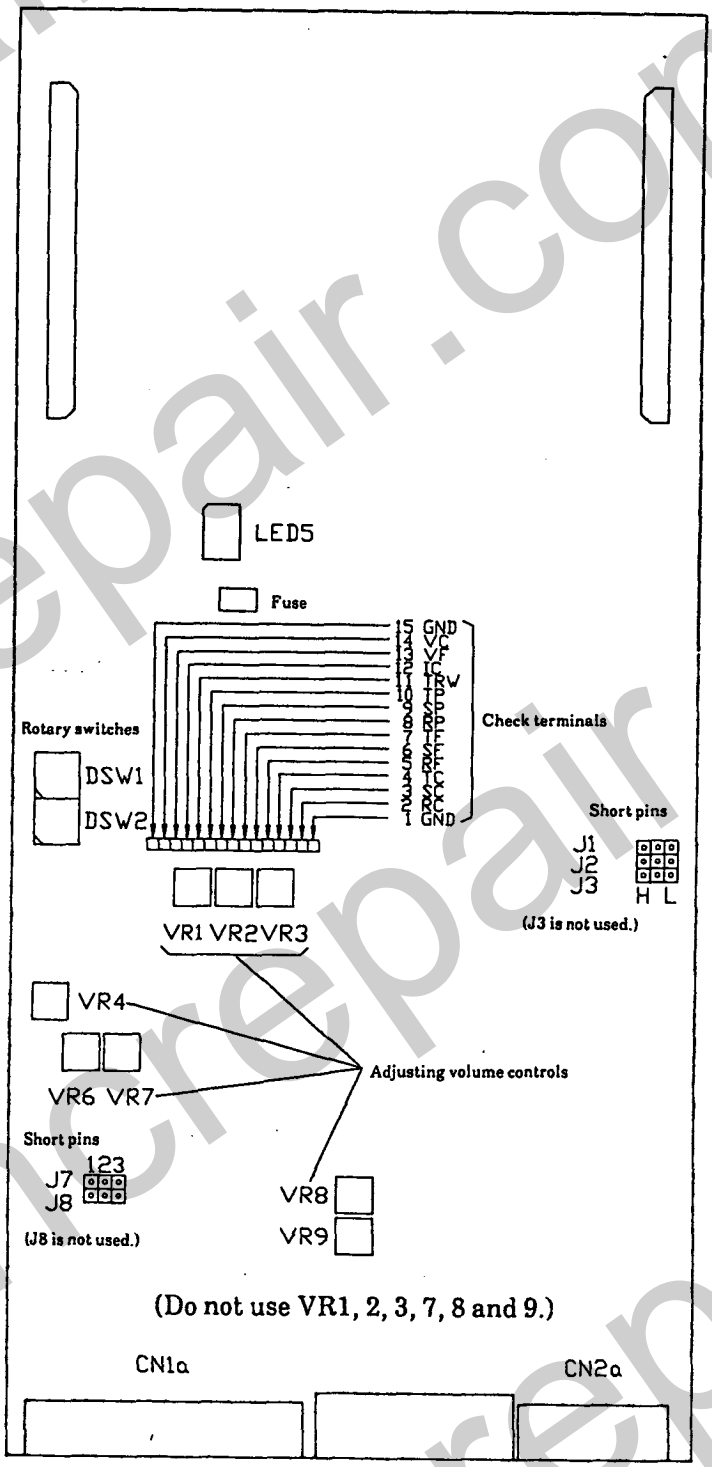

4.6.2 Torque control

(1) Torque (current) control functions

- By arrangements of short-circuit pins J1 and J2 (refer to page 51), the max. torque (max. output current) may be controlled.
- 300%, 240% and 180% of the rated torque (continuous output current) may be selected.
- This is set to 300% when the equipment is shipped.

J1	J2	Output torque	
H	H	300%	Set before shipment.
H	L	240%	
L	H	180%	
L	L	Prohibited to use.	For adjustments before shipment.

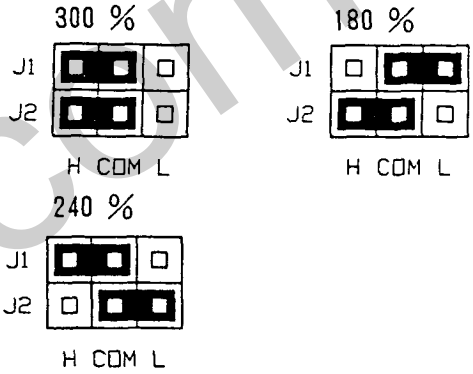

(2) Torque (current) control function by external signals

- The max. torque (max. output current) may be controlled by externally applying voltage to the pin No.28 or No. 44 of the CN1a connector for input and output signals of the driver.
- CW rotation side torque control

  The max. torque (max. output current) during CW rotation may be controlled by applying positive voltage (0 to +10V) to the pin No.28 of the CN1a connector for input and output signals.
- CCW rotation side torque control

  The max. torque (max. output current) during CCW rotation may be controlled by applying negative voltage (0 to −10V) to the pint No. 44 of the CN1a connector for input and output signals.
- Relations between the set voltage and torque (current)

  ± 3V = ± rated torque (continuous output current)

  ± 10V = ± the threshold limit value of the max. torque (max. output current)
- When the voltage setting is made beyond +10V and −10V, the max. torque (max. output current) does not change.
- The torque control may be separately made on the CW rotation side and CCW rotation side.

4.6.3 Changing the speed command

- The speed command input is set to (± 3V = ± 1000rpm).
- By arrangements of the short-circuit pin J7, it may be changed to (±3V to ± 6V = ± 1000rpm).
- Even if above change is made, the terminals to input the speed command [Pin No.12 & No13 in CN1a] do not change.

(1) Re-arrangement of pins of J7

Short-circuit 2 and 3.	± 3V = ± 1000rpm (Set before shipment)
Short-circuit 1 and 2.	Variable (± 3V to ± 6V) = ± 1000rpm

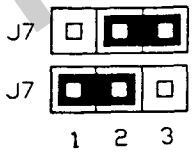

(2) Adjustment when the speed command (± 3V to ± 6V) variable is selected.

- When changing the speed command, short-circuit 1 and 2 of the short-circuit pin J7. Then, measuring the revolution, set up by use of the adjusting volume control VR6.

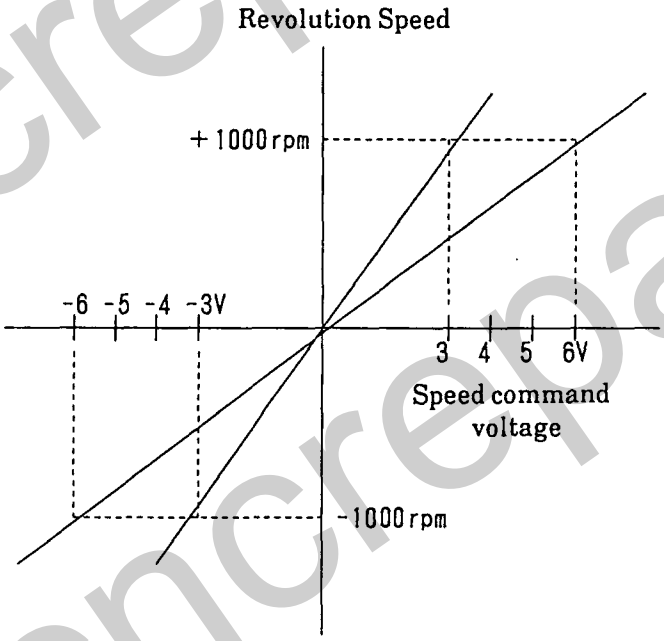

Adjusting volume control VR6

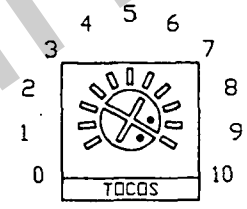

±1000rpm=±3V [Reading 10]

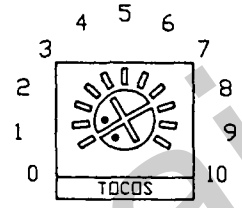

±1000rpm=±6V [Reading 0]

4.6.4 Adjustment of the speed loop gain

- The speed loop gain is set by the rotary switches and adjusting volume control (VR4).

(1) Selection of the speed loop gain by rotary switches

- The structures of the rotary switches (DSW1 and DSW2) and the adjusting volume control VR4 are as shown in the diagram below.

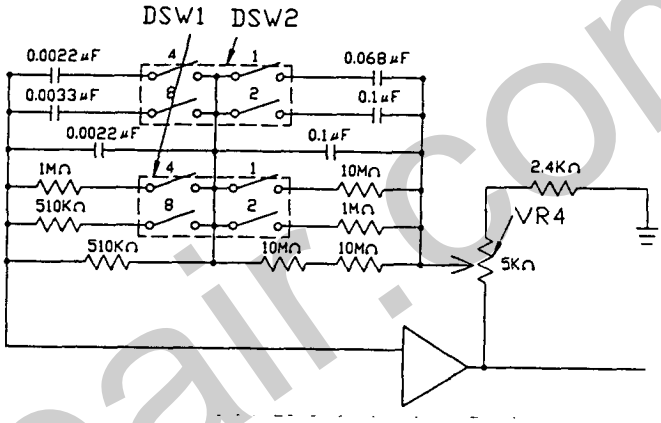

- In the resistor section, a rotary switch indicated as DSW1 is provided and in the capacitor section, rotary switch indicated DSW2 is provided.
- By setting up of the rotary switlches, the speed loop gain may be changed by the cycles.
- In each of the rotary switches (DSW1 and DSW2), 4 switch-units are provided and numbers 1, 2, 4 and 8 are given to each of the 4 switch-units. Be sure that the sum of the numbers of the switch-units being connected equals to the figure pointed in the scales of the rotary switches (DSW1 and DSW2).

Appearance of the rotary switches

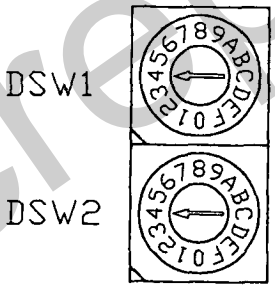

- Numbers in the rotary switches (A = 10, B = 11, C = 12, D = 13, E = 14 and F = 15)
- For example, when not connecting any of the switch-units, 0 should be pointed. When connecting 1, make it point 1. When connecting 1 and 2, make it point 3. When all the unit-switches are connected, F (15) should be pointed.

(2) Adjustment by adjusting volume control VR4

- Make final adjustment of the gain selected by the rotary switches using the adjusting volume control VR4.

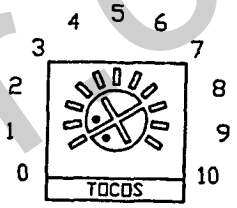

K1=K [Reading 0]

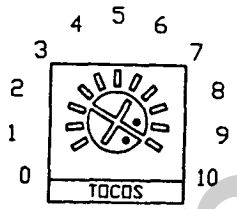

K1=3K [Reading 10]

- Calculate the speed loop gain in cases of Scale x (readings 1 to 10) by the formula below: (Speed loop gain of reading 0 = K)

$$K1=\frac{7.4\times K}{0.5\times(10-X)+2.4}$$

4.6.5 Table of check terminals

Terminal numbers	Signal names	Explanations
1	GND	Reference terminal 0V
2	RC	R-phase command SIN wave
3	SC	S-phase command SIN wave
4	TC	T-phase command SIN wave
5	RF	R-phase current feedback
6	SF	S-phase current feedback
7	TF	T-phase current feedback
8	RP	R-phase current Amp output
9	SP	S-phase current Amp output
10	TP	T-phase current Amp output
11	TRW	Carrier chopping wave cycle=310-330 μsec
12	IC	Torque monitor ± 3V = Rated torque ± 10% Max. ± 10V
13	VF	Speed feedback of the motor ± 3V = ± 1000rpm
14	VC	Speed command to the motor ± 3V= ± 1000rpm
15	GND	Reference terminal 0V

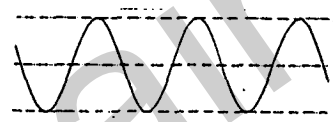

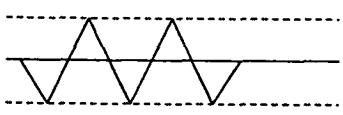

Remark: 1. Measurement : Measure by an oscilloscope using check terminals (2 to 14) and GND (ground)(1 or 15.).

4.7 Measuring the AC servo motor shaft torque and speed (revolution)

4.7.1 Measuring methods

When measuring the AC servo motor shaft torque and speed (revolution), measure by oscilloscope using pin Nos. 8, 9, 10 and 11 in the CN1a connector (see page 50) for the input and output signals of the servo driver.

4.7.2 Calculation of torque

- Calculating the AC servo motor shaft torque

  alculate the AC servo motor shaft torque, on the basis of the measuring voltage, using the formula given below:

$$\text{AC servo motor shaft torque} = \text{Measuring voltage} \times (\text{A/V value} \times \text{Torque constant} \times \frac{1}{\sqrt{2}}$$

$$= \text{Measuring voltage x constant}$$

Types	15	30	60	135
A/V values	1.75	2.50	4.16	6.25
Torque constant	5.0	7.0	7.3	8.4
Constant	6.19	12.37	21.47	37.12

- Calculating the servo actuator output shaft torque

$$\text{Servo actuator output shaft torque} = \text{AC servo motor shaft torque} \times \text{reduction gear ration (R)} \times 0.75$$

5. Connection diagram

5.1 When using the multiturn absolute encoder

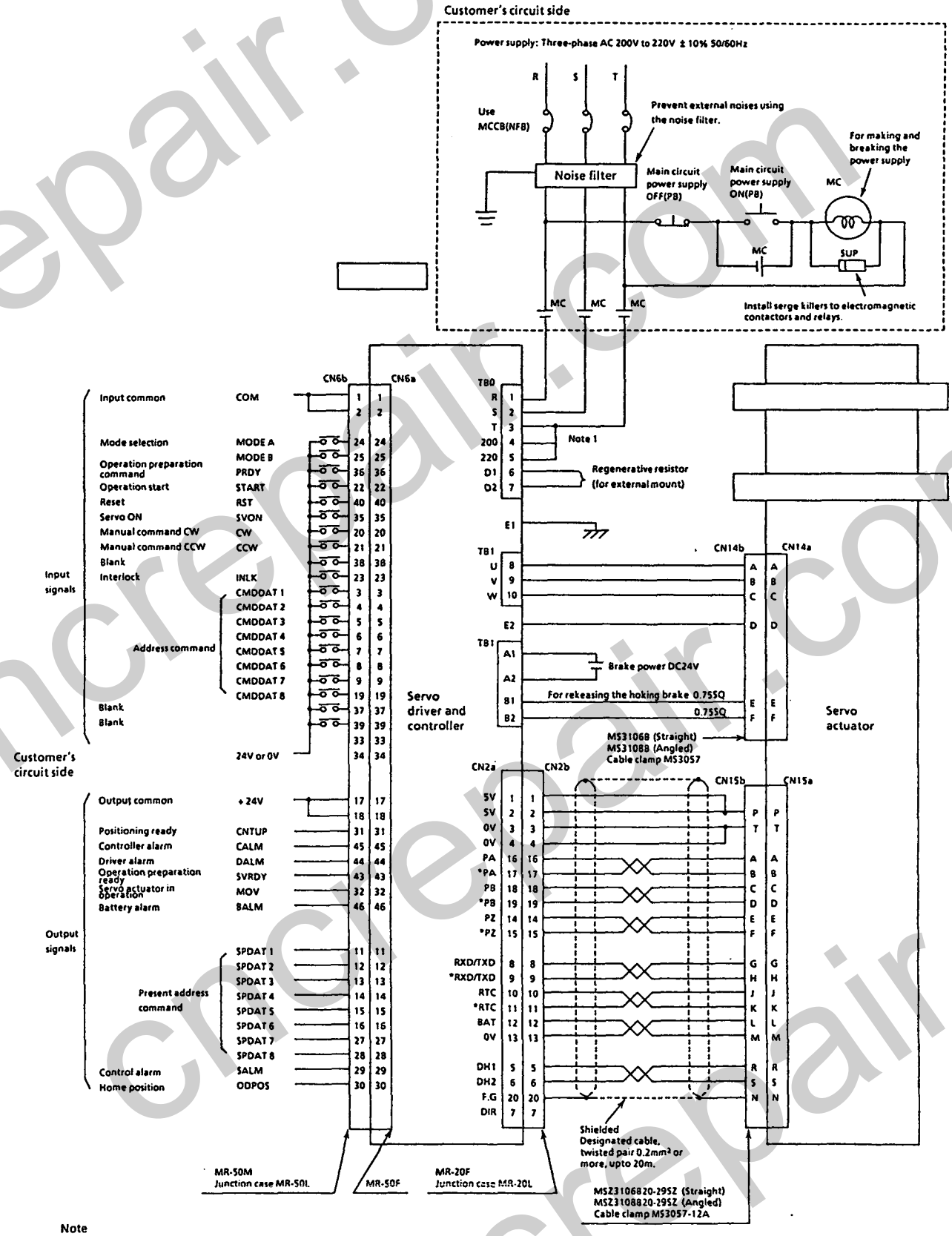

Note
1. Use the 200V tap when the input voltage is 180V to 220V.
   Use the 220V tap when the input voltage is 200V to 240V.
   (The 220V tap is used when shipped from the plant.)
2. Our input circuit (C) and output circuit (C).

5.2 When using the incremental encoder

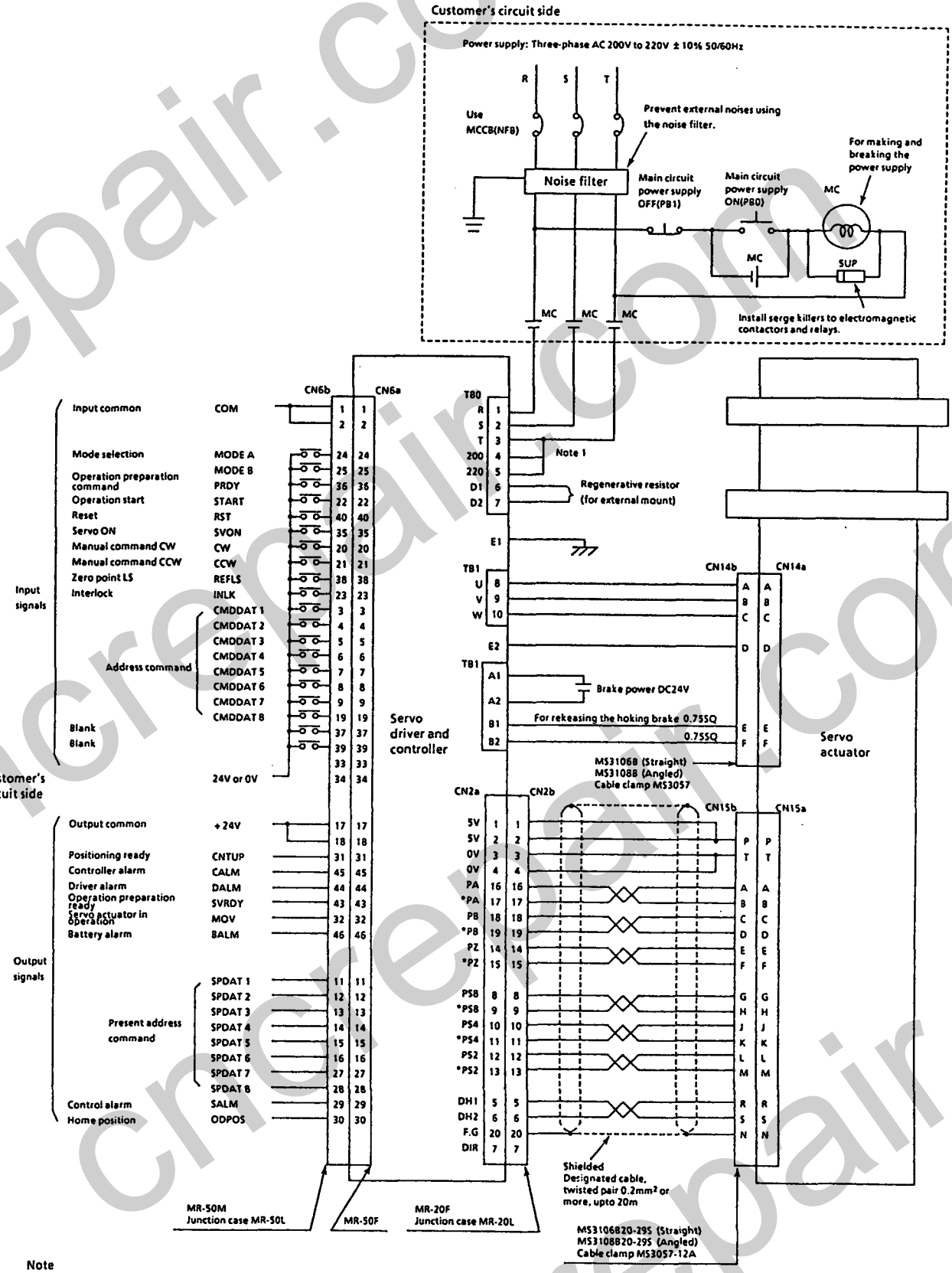

Note
1. Use the 200V tap when the input voltage is 180V to 220V.
   Use the 220V tap when the input voltage is 200V to 240V.
   (The 220V tap is used when shipped from the plant.)
2. Our input circuit (C) and output circuit (C).

6. Installation, test operation and adjustments

6.1 Installation of the servo actuator

- The servo actuator may be installed either horizontally or vertically.

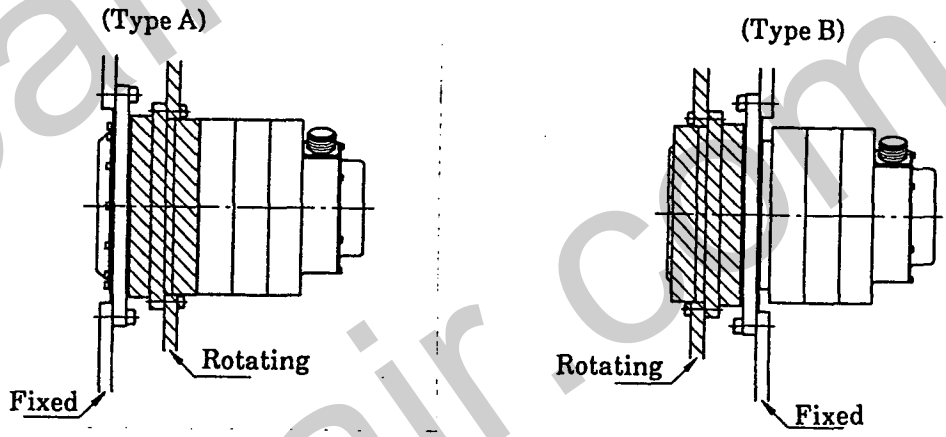

6.1.1 Clamping torque and allowable transfer torque

- Use hexagon socket head cap screws (JISB 1176) for installation.
- Fixing bolts should be clamped at the clamping torque given in the table below.

Remarks: ① Data given below are in case the object for mounting is made of steel or cast iron.
② When aluminum etc. are used, carefully re-study the clamping torque and transfer torque.

(When $\mu = 0.15$)

Types	Fastening sections	Bolts Quantities and Sizes	Clamping torque kgf-m	Allowable transfer torque kgf-m	Bolts to be used
AR-15	Rotating section	8-M6	1.6±0.08	109	• Hexagon socket head cap screws JISB 1176 • Strength JISB 1051 12.9 • Threading JISB 0205 6g or Class 2
	Fixed section	6-M8	3.8±0.19	176	
AR-30	Rotating section	8-M8	3.8±0.19	256	
	Fixed section	6-M10	7.5±0.35	367	
AR-60	Rotating section	12-M8	3.8±0.19	453	
	Fixed section	8-M10	7.5±0.35	559	
AR-135	Rotating section	12-M12	13.1±0.65	1315	
	Fixed section	12-M12	13.1±0.65	1518	

6.1.2 Aligning

- External load holding bearings are installed to the servo actuator.
- Aligning accuracy should be 30μ to 50μ.

6.1.3 Conical spring washers

- Use conical spring washers for hexagon socket head cap screws to prevent loosening of hexagon socket head cap screws and to avoid scratching on bearing surfaces of bolts. 20.

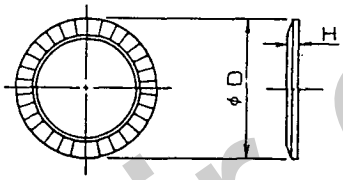

Name:	Hexagon socket head cap screws (Manufactured by Heiwa Hatsujo Co., Ltd.)
Abbreviated name:	Sara SW-2H
Material:	S50CM to S65CM
Hardness:	HRC40 to 48

6.2 Installation of the servo driver/controller

6.2.1 Methods of installation

- The servo driver/controller is designed to be installed vertically.
- Install in such direction as the terminal board comes to the lower side.

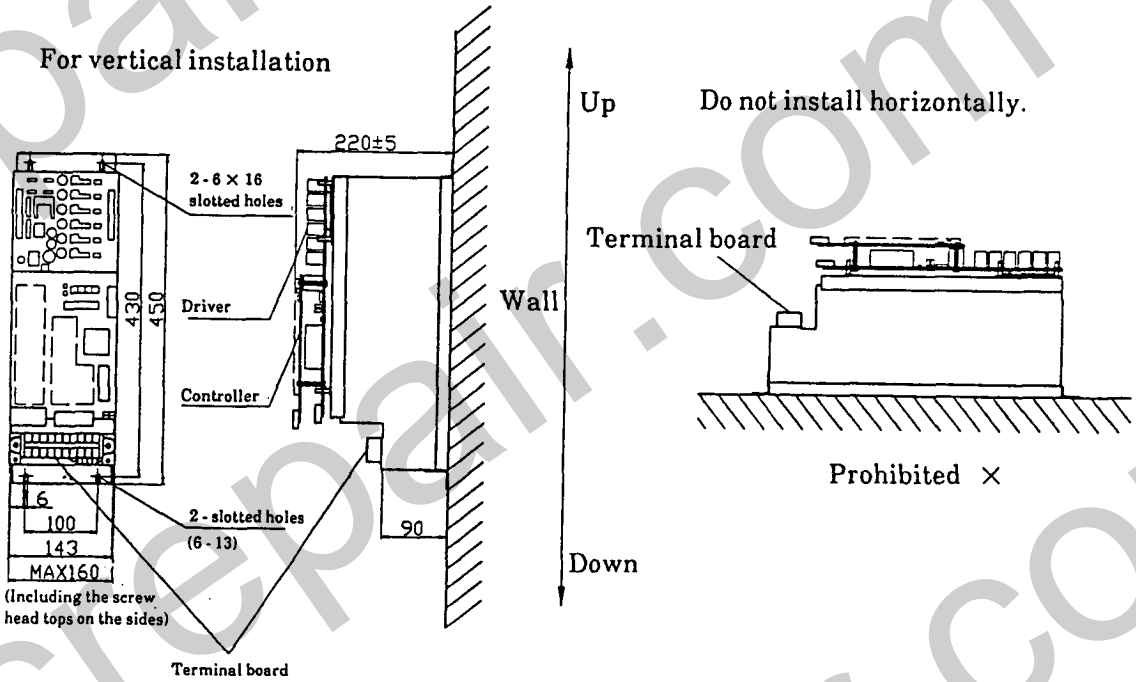

6.2.2 Environment of the installing location

- Temperature conditions

  The internal temperature of the facility is affected by calorific power of the machines and equipment and by the size of the box. Make sure that the ambient temperature stays less than 50°C.

(Heat generation of servo driver/controller)

Types	Output	Calorific power
AR-15	0.4 kw	60W
R-30	0.8 kw	100W
AR-60	1.5 kw	170W
AR-135	2.5 kw	270W

- Vibrations

  When the location is close to sources of vibrations, use materials to absorb vibrations such as shock absorbers between the facilities and the base of installation.

- Atmosphere

  Imperfect contacts may occur with the connectors, electromagnetic contactors and relays under an atmosphere with high temperature, high humidity, full of dust, falling iron powders and with corrosive gas. Avoid using the equipment under such atmosphere.

6.3 Wiring and connections

6.3.1 Wiring to the servo driver/controller

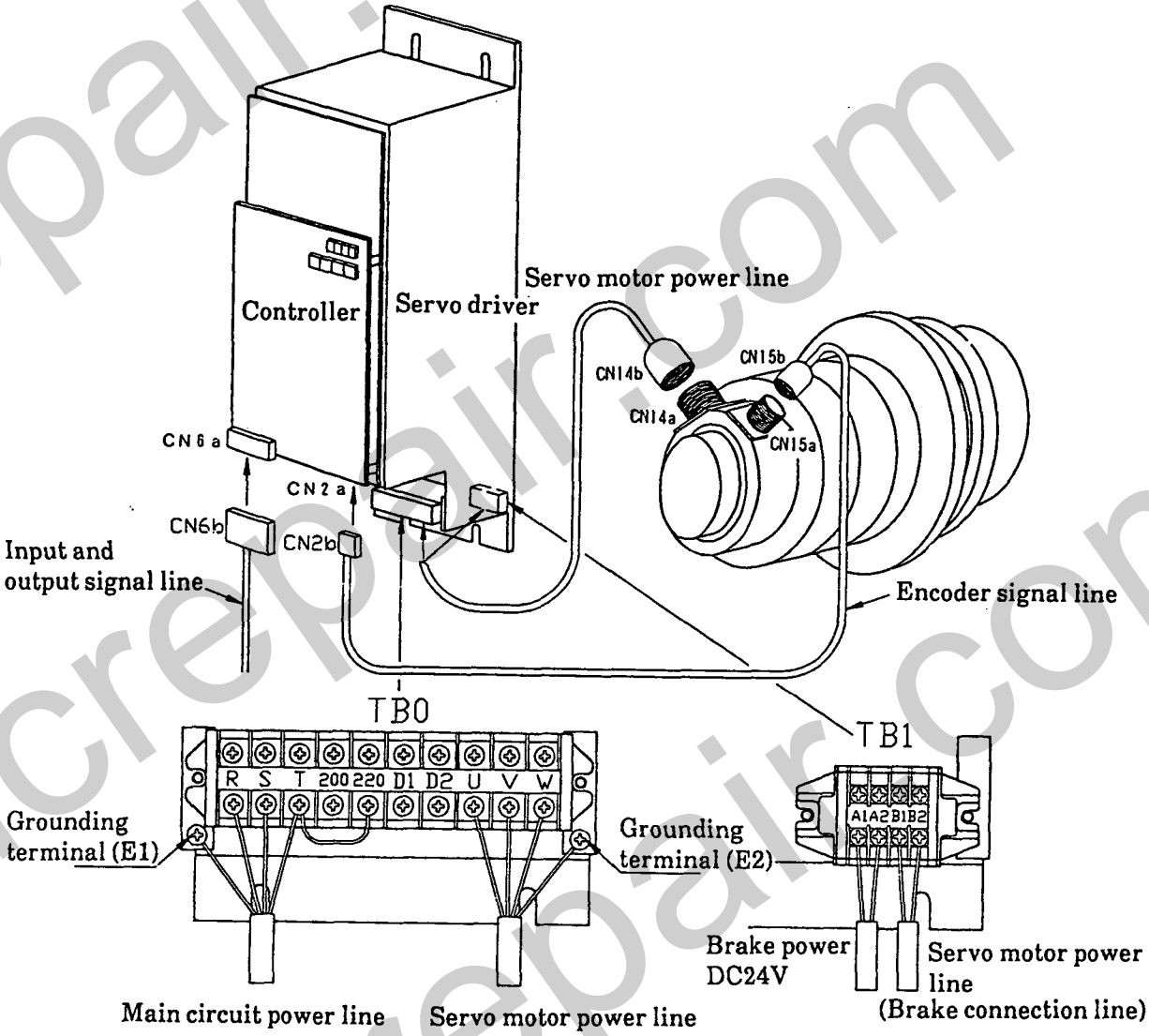

Names of terminals

Terminal board Nos.	Symbols of terminals	Names	Contents
TB-0	RST	Main circuit power input terminal	Three-phase 200 to 220V ± 10% (50/60Hz)
	UVW	Servo motor power line terminal	U-motor A terminal, V-motor B terminal and W-motor C terminal
	200, 220	T-phase connection terminal	Connecting 200 or 220 and T-phase
	D_1, D_2	Regenerative resistor connection terminal	For external connection of the regenerative resistor
		Grounding terminal	For grounding of the motor D terminal and the main circuit power
TB-1	A_1, A_2	Brake power input terminal	To input the brake power DC24V
	B_1, B_2	Brake connection terminal	Connecting to E terminal and F terminal of the motor

Remark: Connect the wire coming from T-phase to terminals "200" or "220" properly.
(Connect to "200" in case of 180V to 220V and to "220" in case of 200V to 240V.)

6.3.2 Specifications of receptacles

(1) Specifications of connections

Layouts of pins of the servo actuator receptacles are shown below.

◆ For servo motor power line (CN14a)

▸ (For AR15)

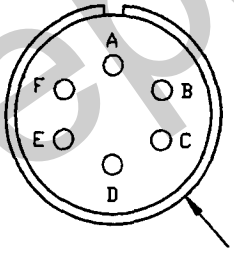

Pin Nos.	Signal names
A	U
B	V
C	W
D	F.G (Frame ground)
E	B1 (Holding brake)
F	B2 (Holding brake)

AR15 JAE MS3102A 14S-6P

▸ (For AR30 to AR135)

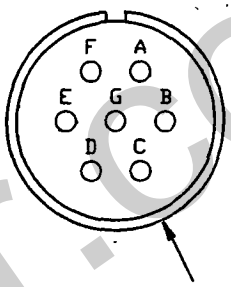

Pin Nos.	Signal names
A	U
B	V
C	W
D	F.G (Frame ground)
E	B1 (Holding brake)
F	B2 (Holding brake)
G	–

AR30 JAE MS3102A 16S-1P
AR60 JAE MS3102A 20S-15P
AR135 JAE MS3102A 24S-10P

◆ For encoder signal line (CN15a)

▸ (Multiturn absolute type)

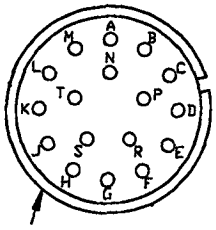

JAE M3102A 20-29PZ

Pin Nos.	Signal names	Pin Nos.	Signal names
A	PA	K	* RTC
B	* PA	L	BAT
C	PB	M	0V
D	* PB	N	F.G
E	PZ	P	+5V
F	* PZ	R	DH1
G	RXD/TXD	S	DH2
H	* RXD/TXD	T	0V
J	RTC		

▸ (Incremental type)

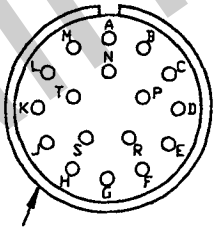

JAE M3102A 20-29P

Pin Nos.	Signal names	Pin Nos.	Signal names
A	PA	K	* PS4
B	* PA	L	PS2
C	PB	M	* PS2
D	* PB	N	F.G
E	PZ	P	+5V
F	* PZ	R	DH1
G	PS8	S	DH2
H	PS8	T	0V
J	PS4		

(2) Types of receptacles and plugs

◆ Servo motor power line (CN14)

	CN14a	CN14b		
	Types of receptacles	L-shape plugs	Straight plugs	Cable clamps
AR15	MS3102A14S-6P	MS3108B14S-6S	MS3106B14S-6S	MS3057-6A
AR30	MS3102A16S-1P	MS3108B16S-1S	MS3106B16S-1S	MS3057-8A
AR60	MS3102A20-15P	MS3108B20-15S	MS3106B20-15S	MS3057-12A
AR135	MS3102A24-10P	MS3108B24-10S	MS3106B24-10S	MS3057-16A

◆ Encoder signal line (CN15)

	CN15a	CN15b		
	Types of receptacles	L-shape plugs	Straight plugs	Cable clamps
AR15	MS3102A20-29P (Z)	MS3108B20-29S (Z)	MS3106B20-29S (Z)	MS3057-12A
AR30				
AR60	* Marked (Z) are in case of the multiturn absolute encoder.			
AR135				

6.3.3 Specifications of signal line connectors

(1) Encoder signal line (CN2)

◆ Layouts of pins of the connector (CN2a)

▸ Multiturn absolute type

1	2	3	4	5	6	7
5V	5V	0V	0V	OH1	OH2	DIR

8	9	10	11	12	13
RXD/TXD	*RXD/TXD	RTC	*RTC	BAT	0V

14	15	16	17	18	19	20
PZ	*PZ	PA	*PA	PB	*PB	FG

▸ Incremental type

1	2	3	4	5	6	7
5V	5V	0V	0V	OH1	OH2	DIR

8	9	10	11	12	13
PS8	*PS8	PS4	*PS4	PS2	*PS2

14	15	16	17	18	19	20
PZ	*PZ	PA	*PA	PB	*PB	FG

◆ Types of the connector and applicable plugs (CN2)

Types of connectors (CN2a)	Types of applicable plugs (CN2b)			
	Soldered type	Caulked type	Case	Name of the manufacturer
MR20RMA Right angle 20P	MR-20F	MRP-20F01	MR-20L	Manufactured by Honda Tsushin Kogyo Co., Ltd.

(2) Input and output signal line (CN6)

◆ Layouts of pins of the connector (CN6a)

1	2	3	4	5	6	7	8	9	10	11	12	13	14	15	16	17	18
DICOM	DICOM	CMDDAT1	CMDDAT2	CMDDAT3	CMDDAT4	CMDDAT5	CMDDAT6	CMDDAT7		SPDAT1	SPDAT2	SPDAT3	SPDAT4	SPDAT5	SPDAT6	DOCOM	DOCOM

19	20	21	22	23	24	25	26	27	28	29	30	31	32
CMDDAT8	CW	CCW	START	INLK	MODE A	MODE B		SPDAT7	SPDAT8	SALM	IDPOS	CNTUP	MOV

33	34	35	36	37	38	39	40	41	42	43	44	45	46	47	48	49	50
NC	NC	SVON	PROY	INI7	REFLS		RST			SVRDY	DALM	CALM	BALM				

Remark: 1. CN-38 is not used when the encoder is of the multiturn absolute type.

◆ Types of the connector and applicable plugs (CN6)

Types of connectors (CN6a)	Types of applicable plugs (CN6b)			
	Soldered type	Caulked type	Case	Name of the manufacturer
MR50RMA Right angle 50P	MR-50M	MRP-50F01	MR-50L	Manufactured by Honda Tsushin Kogyo Co., Ltd.

6.4 Cautions for wiring

6.4.1 Connection of the main circuit power

- Make the power connections as shown in the diagram below.

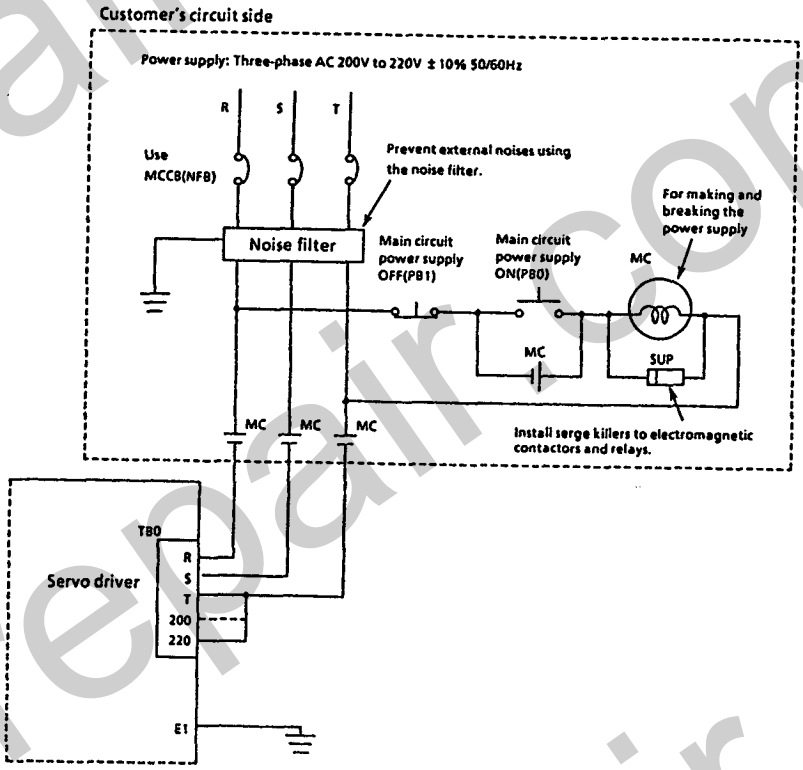

6.4.2 Protection of power supplies

- Be sure to install a molded case circuit breaker (NFB) or a fuse at the intake of the main circuit power.
- Do not use a quick melting fuse as it may melt when the power is turned on.

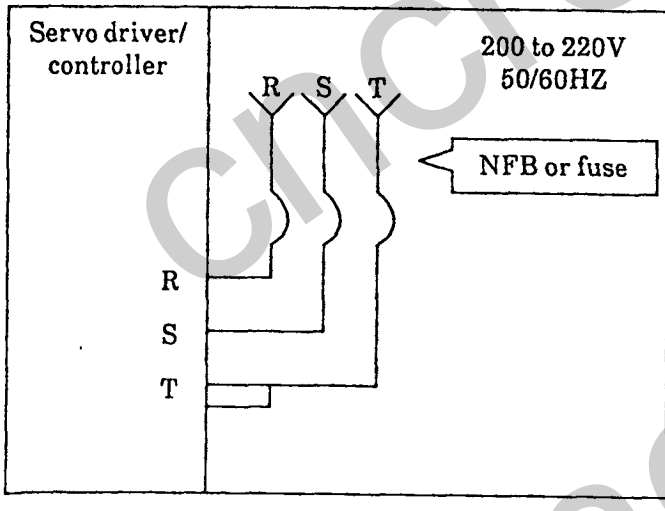

Servo driver power capacity and NFB or fuse capacity

(For one unit)

Types	Servo driver power capacity (KVA)	NFB or fuse capacity (A)
AR15	0.8	5
AR30	1.2	8
AR60	1.8	10
AR135	3.5	12

(Values in cases of rated loads)

6.4.3 Main circuit power supply conditions

- The power supply for the AR series is "three-phase 200 to 220V ± 10% 50/60Hz".
- When available power supply voltage differs from the above, install a power transformer to meet the above requirement.
- Making and breaking of the power supply should be done on the primary side of the power transformer.

6.4.4 Applicable wires and sizes

- Recommended wires and sizes are given in the table below.

(HIV: Special heat resistant PVC wire)

Types	Main circuit power line R·S·T (mm^2)	Motor power line U·V·W (mm^2)	Brake power line A_1, A_2 (mm^2)	Encoder signal line: CN2 Input and output signal line: CN6 (mm^2)	Grounding line (mm^2)
AR-15	HIV 0.75 or more	HIV 0.75 or more	HIV 0.75 or more	Twisted pair wire or shielded twisted pair wire with the core wires of 0.2mm^2 equivalent or more. Tinned annealed copper twisted wires.	HIV 2.0 or more
AR-30	HIV 1.25 or more	HIV 1.25 or more			
AR-60	HIV 2.0 or more	HIV 2.0 or more			
AR-135	HIV 3.5 or more	HIV 3.5 or more			

- Above data are on the basis of the ambient temperature at 40°C, with 3 lines of the group of cables and when rated current is conducted.
- [KIV: PVC insulation wires for electric equipment] may also be used. Sizes are same as HIV.

6.4.5 Grounding

- Be sure to connect the D-terminal of the motor power line connector to the grounding terminal of the driver.
- Directly ground the grounding terminal of the driver.
- When the frame to which the servo actuator is installed is made of synthetic resin, etc. and the equipment becomes insulated, it needs to ground the servo actuator itself.
  Contact us in such cases.

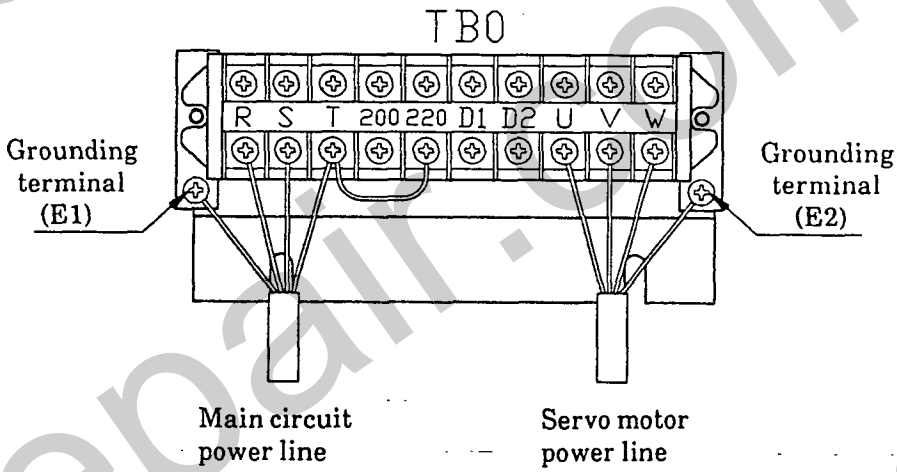

6.4.6 Wiring of signal lines

- Types of signal lines
  Always use twisted wires or shielded twisted pair wires.
- Length of signal lines
  Input and output signal lines: Max. 3 m
  Encoder signal lines: Max. 20 m
- Connect all signal lines including those which are not in use to connectors (CN2b, CN6b, etc.).
- As the core wires of signal lines are thin (0.2 to 0.3mm^2), be sure that bending stress and tensile stress may not be applied to the lines.

6.4.7 Noise suppression

- Do not lead strong-electricity wires (such as main circuit power line and motor power line) and signal lines (such as input and output signal lines and encoder signal lines) in a same duct or do not bundle them together. Always lead them separately.
- Do not use power supplies in common with noise generating sources (such as electric welders and electric discharge machines).
- When there is a noise generating source nearby, install a noise filter.
- Always install surge absorber circuits to coils of relays, electromagnetic contactors and solenoids.
- When radio receiver noise problems occur, install line filters to the power lines.

6.4.8 Cautions on the holding brake

- Handling the holding electromagnetic brake
  - The built-in brake of the servo actuator is for holding exclusively.
  - When releasing the brake power, make sure the servo actuator is stopped.
  - **When brake power is released or servo ON signal is turned off while the servo actuator is rotating, the electromagnetic brake works and contact surface of the electromagnetic brake will be worn out abnormally.**

- Specifications of the holding electromagnetic brakes

Types	Holding torque kg-m (Servo motor shaft)	Voltage DC(V) ± 10%	Current (A) at 20°C
AR15	0.14	24	0.25
AR30	0.3		0.4
AR60	0.6		0.5
AR135	1.2		0.75

Remark: Take the brake power in independently.
Keep it separate from the power supply for the input and output signals.

6.5 Trial operation

6.5.1 Inspections before operation

- Check if connections are correct. (See pages 63 to 72)
- Check if the main circuit voltage is appropriate. (200/220V ± 10%)
- Check if an NFB or fuse is installed.
- Make sure the wires from T-phase of the main circuit power terminals is connected properly to the terminal "200" or "220", depending on the power voltage of the main circuit.
- Make sure the motor connection terminals (U, V & W) and the motor terminals (U, V & W) are matching.
- Make sure the operation preparation command signal is turned off.

6.5.2 Starting the operation

(1) Applying the main circuit power

- Apply the main circuit power after turning off the operation preparation command signal and servo ON signal (see page 28)
- When the main circuit power is applied, "0" is indicated in the display LED5 on the servo driver.

(2) Check if the main power is applied before setting the parameter.
Compare your specifications with the initialization values (see pages 37 to 44) to modify where the values differ.
For methods of modifications, refer to the clause of Checking and modifying the parameter setting values (page 35).

(3) After finishing the parameter setting, turn off the main circuit power once to turn on again. Parameter setting may not become effective unless the main circuit power is re-applied.

(4) Enter the operation preparation command signal and servo ON signal.

(5) Select manual JOG operation mode by the mode selection signal (see page 25) to start operation.

(6) Start from no-load running before shifting to loaded operation to check following items.

① If the servo actuator is rotating in correct direction.

② If the is not abnormal vibrations.

③ If there is not abnormal sound.

④ If the temperature does not rise sharply.

(7) When abnormalities are not found, perform zero point adjustment. (See Section 6.6 below)

(8) When zero point adjustment is completed, start automatic operations.

6.6 Zero point adjustment

(1) In case of the incremental type

- After the signals from the zero point LS are entered once and turned off, the initially detected Z-phase position in the encoder becomes the zero point of the servo actuator.
- When the zero point of the machine and that of the servo actuator differs considerably, adjust the position of the zero point limit switch position.
- Fine adjustments after the above should be made by grid shift values (Parameter No. P-15 in page 39).

(2) In case of the multiturn absolute type

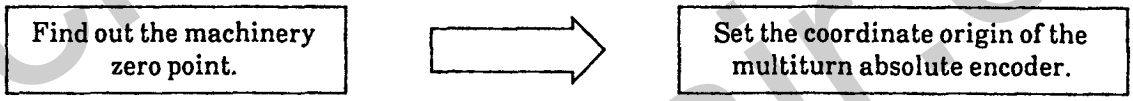

- Find out the machinery zero point using jigs, etc.

  Remark: When finding out the machine zero point, select the optional step feeding mode (Parameter No. P-67 in page 43) or the minute step operation (Parameter No. P-69 in page 44) of the local mode, to actuate the servo motor.

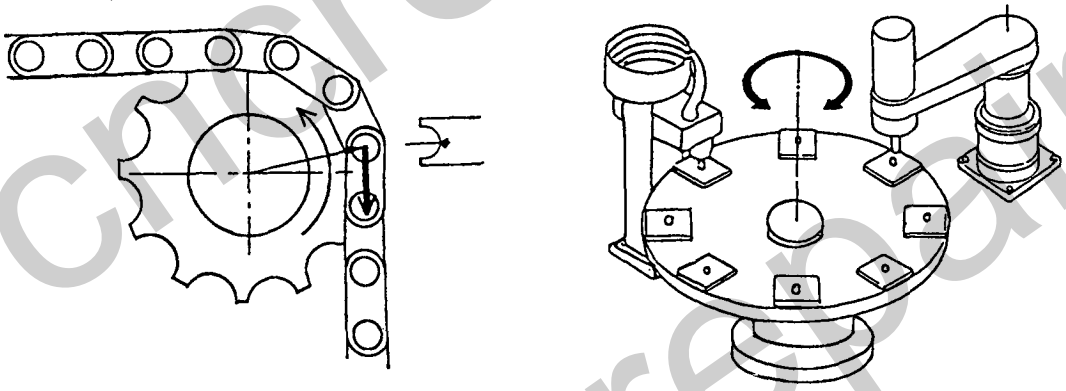

- When the machinery zero point is found, press the pushbutton switches (PB2) on the servo driver/controller to set the coordinate origin of the multiturn absolute encoder.

  Remark: Before making zero point adjustment, make sure the Parameter No. P-13 (in page 38) and P-60 (in page 42) are set to the multiturn absolute type.

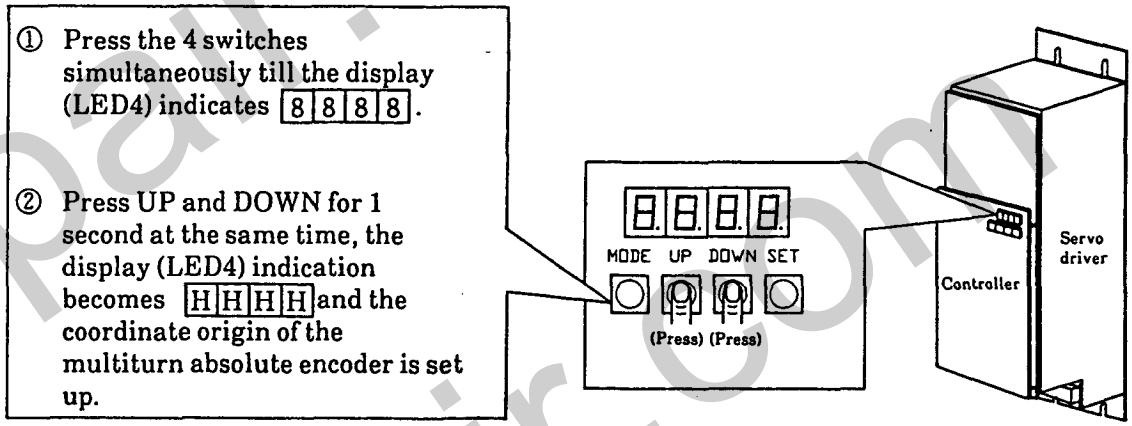

Remarks:
- The machinery zero point is the status wherein the indexing No. 1 is positioned at the designated indexing position.
- Record the value of Parameter No. P-14 (page 39).

7. Detecting abnormalities and coping with them

7.1 Protection functions

When abnormalities occur, the dynamic brake works to make an emergency stop with the servo actuator. At the same time, the display on the servo driver/controller indicates alarm state to output alarm number externally.

- In case of the control alarm, alarm number is indicated in the LED4 and control alarm signal is outputted.
- In case of the driver alarm, the alarm number is indicated in the LED5 ands driver alarm signal is outputted.
- In case of the controller alarm, CPUAL lights to output the controller alarm signal.
- In case of the battery alarm, BATAL lights to output the battery alarm signal.

(1) Layouts of the servo driver/controller display section

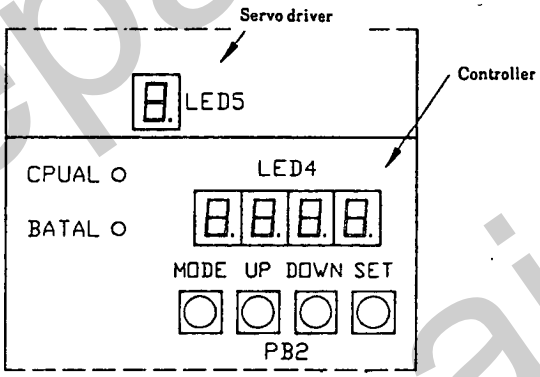

7.1.1 Contents of the control alarm and the driver alarm

Alarm numbers (Indicated in LED4)	Contents
E-1	When the servo driver does not become the operation preparation ready status, numbers listed below are indicated in the LED5 on the servo driver and the driver alarm is outputted.

LED5 Indications	Contents of alarms	Explanations
1.	Excess current	Detects when excess current flows in the main circuit. (1.2 times or more of the max. output current)
2.	Over-voltage	Detects when the main circuit DC voltage rises abnormally. (Detects at about 400V.)
3.	Open signal line	Detects when the encoder signal line is open.
4.	Low voltage	Detects when the main circuit DC voltage drops to about 200V or less.
5.	Overload	Detects when over-loaded or when the regeneration frequency is high.
6.	Overheating	Detects when the servo motor or servo driver is overheated.
7.	NFB trip	Detects when NFB trip occurs.
8.	Open power line	Detects when the servo motor power line is open.
.	Abnormalities in the circuits	Detects when abnormalities occur in the printed circuit board.
Does not light	Abnormalities in the 5V power supply	Detects when the fuse in the printed circuit board melts. (Type DM20 made by Daito Tsushinki Co., Ltd.)
0.	Normal	

E-2	When positional deviation exceeds the tolerance.
E-3	When an address beyond setting range is designated.
E-4	When the coordinate goes beyond the coordinate limit of the control system.
E-5	In case of excess drift.
E-6	When the operation results overflow.
E-7	When data beyond the setting range are set to the parameter.
E-8	When the zero point may not be detected (with the incremental type).
E-10	In case of MAE communication error or abnormalities in data transfer.

Alarm numbers (Indicated in LED4)	Contents
E-11	In case of MAE framing error or abnormalities in data transfer.
E-12	In case of MAE over-run error or abnormalities in data transfer.
E-13	In case of MAE parity error or abnormalities in data transfer.
E-14	When voltage of the MAE battery drops.
E-15	When the MAE built-in capacitor voltage drops to a level at which data-hold is not feasible.
E-16	When the multi-turn counter in the MAE overflows.

Remarks: ① MAE = Multiturn absolute encoder

② With alarm Nos. E-14 to E-16, alarm is outputted when abnormalities occurred in the past even if normal at present.

7.1.2 Releasing the alarm state

- Alarm Nos. E-1 to E-13 may be released by entering the reset signal.
- When alarm Nos. E-14 to E-16 come out, position the index No.1 to the designated indexing position to check if properly set to the machinery zero point. Then press pushbutton switches (PB2) on the servo driver/controller to set the coordinate origin. (See page 74)
- When not yet set to the machinery zero point, make zero point adjustment. (See page 74)
- The controller alarm may not be released by the reset signal.

  Turn off the power supply once and turn on again. If the alarm still appears, the reason may be, ① the reset signal is kept entering, or ② troubles in the controller.

  Check the situation and take proper steps.

  Remark: When an alarm appears, check the cause and take necessary measures. If measures are not taken, alarm appears again even after the alarm is released.

7.1.3 Dynamic braking function

With the servo driver, dynamic braking function is provided for stopping operations when abnormalities occur.

The dynamic brake works under following status:

- When an alarm is actuated.
- When NFB trips.
- When the servo ON signal is turned off during operation.
- When the main circuit power is turned out during operation.

7.2 Diagnosis and countermeasures for abnormalities in controls

Contents of alarms	Presumed causes	Countermeasures
E-2 (When positional deviation exceeds tolerance.)	• Setting value of the permissible positional deviation of the parameter is too small. (Parameter No. P-10 in page 38)	• Increase the setting value of the permissible positional deviation.
	• The load is too large. • The time constant is too small. • The holding electromagnetic brake is kept working.	• Decrease the load • Increase the time constant. • Grade up the type of servo actuator. • Release the electromagnetic brake. (Check the electromagnetic brake and, if abnormalities are found, renew it.)
E-3 (When an address beyond setting range is designated.)	• Abnormalities in the programs of NC/PC or sequencer.	• Correct the programs properly.
	• Wrong wiring or imperfect contact in the input and output signal line.	• Connect the input and output signal line properly.
E-4 (When the coordinate values exceed the coordinate limits of the control system.)	• Errors in setting of the stroke limits of the CW rotation side and CCW rotation side. (Parameter Nos. P-18 & P-19 in page 40)	• Set the stroke limit properly.
	• Errors in the manual operations (Step or JOG).	• Operate within the stroke limit.
E-5 (In case of excess drift)	• Imperfect connection of the motor power line. • Imperfect connection of the encoder signal line. • Imperfect adjustment of the controller. • Imperfect adjustment of the servo driver.	• Connect the motor power line properly. • Connect the encoder power line properly. • Renew the controller. • Renew the servo driver.
E-6 (When operation results overflow.)	• Troubles in the controller.	• If the alarm appears when the parameter setting is once returned to the initialization value and then reset, troubles have occurred in the controller. Renew the controller.
E-7 (When data beyond the setting range is set to the parameter.)	• Errors in parameter setting.	• Re-set the parameter setting within the setting range precisely.

Contents of alarms	Presumed causes	Countermeasures
E-8 (When the zero point may not be detected.)	• Failure in the zero point limit switch. • Open signal line coming out from the zero point LS. • Errors in the signal input logic of the zero point LS. (A-contact or B-contact)	• Renew the zero point LS. • Renew the signal line. • Correct to appropriate input logic.
	• Troubles in the controller.	• Renew the controller.
E10 to E-13 (Abnormalities in transfer of the multiturn absolute encoder.)	• Open encoder signal line. • Troubles in the encoder. • Troubles in the controller. • Setting of Parameter No. P-13 (page 38) and NO. P-60 (page 42) is not for the multiturn absolute type.	• Renew the encoder signal line. • Renew the servo motor (including the encoder). • Renew the controller. • Reset the parameter properly.
E14 to E-15 (Voltage drop in the multiturn absolute encoder battery.)	• Open encoder signal line. • Battery voltage drop. • The encoder signal line is not connected.	• Renew the encoder signal line. • Renew the battery. • Connect the encoder signal line. • Reset the zero point and parameter at the same time.
E-16 (The multiturn section counter of the multiturn absolute encoder overflows.)	• The rotation of the servo actuator exceeded the coordinate limits of the multiturn absolute encoder by setting errors of Parameter No. P-18 and P-19 (page 40). • The rotation of the servo actuator exceeded the coordinate limits of the multiturn absolute encoder as the Parameter No. P-60 (page 42) is not set for the shifting function in case of one-way indexing in the endless rotation.	• Reset Parameter No. P-18, P-19 and P-60 properly.

7.3 Diagnosis and countermeasures for abnormalities in the driver

Contents of alarms	Status when the alarm is actuated	Presumed causes	Countermeasures
Excess current	• When the main circuit power is applied.	• Failures in the control substrate.	• Renew the servo driver.
	• When operation preparation command is entered. • At the time of servo on.	• Abnormalities in the main circuit transistor module.	• Renew the servo driver.
	• During operation	• The load is too large. • The time constant is too small. • The holding electromagnetic brake is kept working.	• Decrease the load. • Increase the time constant • Release the electromagnetic brake. • Inspect, repair or renew the electromagnetic brake.
Over-voltage	• When the main circuit power is applied. • When the operation preparation command is entered. • At the time of servo on.	• The main circuit capacitors have not finished electric discharge. • Failures in the control substrate.	• Turn off the power and turn on about a minute later. If the alarm is actuated, there are failures in the control substrate and renew the servo driver.
	• During operation. (during deceleration)	• The load is too large. • The time constant is too small.	• Reduce the load. • Increase the time constant. • Grade up the type of servo actuator.
		• Abnormalities in the regenerative processing circuit.	• Renew the servo driver.
Open signal line	• When the main circuit power is applied. • When the operation preparation command is entered. • At the time of servo on. • During operation.	• Disconnection or wiring error of the encoder signal line.	• Connect the encoder signal line properly.
		• Troubles in the encoder.	• Renew the servo motor (and encoder).
Low voltage	• When the main circuit power is applied.	• Failures in the control substrate.	• Renew the servo driver.
	• When the operation preparation command is entered. • At the time of servo on. • During operation.	• The NFB in the main circuit power input circuit is disconnected.	• Turn the NFB switch on.

Contents of alarms	Status when the alarm is actuated	Presumed causes	Countermeasures
Low voltage	• When the operation preparation command is entered. • At the time of servo on. • During operation.	• Open-phase.	• Connect the main circuit power line properly.
		• Main circuit power voltage drop.	• Inspect and raise the power voltage.
		• Troubles in the diode module in the main circuit.	• Renew the servo driver.
Overload	• When the main circuit power is applied.	• Failures in the control substrate.	• Renew the servo driver.
	• When the operation preparation command is entered. • At the time of servo on.	• Troubles in the regenerative circuit.	• Renew the servo driver.
	• During operation.	• Regeneration frequency is high. • Regeneration capacity is in short.	• Decrease the load. • Increase the time constant. • Lessen the frequency of acceleration and deceleration. • Install the external regenerative resistor. • Grade up the type of the servo actuator.
		• Troubles in the regenerative circuit.	• Renew the servo driver.
Overheating (Temperature under which the alarm appeared.) Servo driver 85°C Servo actuator 120°C	• When the main circuit power is applied.	• Failures in the control substrate.	• Renew the servo driver.
	• When the operation preparation command is entered. • At the time of servo on.	• Failures in the control substrate.	• Renew the servo driver.
		• Open line.	• Inspect OH1 and OH2 of the encoder signal line and connect properly. (See pages 57 and 58)
	• At the time of servo on. • During operation.	• The holding torque during servo lock period is too high.	• Decrease the holding torque. • Set the power save timer (see page 42) to actuate the holding electromagnetic brake. • Grade up the type of the servo actuator.

Contents of alarms	Status when the alarm is actuated	Presumed causes	Countermeasures
Overheating (Temperature under which the alarm appeared.) Servo driver 85°C Servo actuator 120°C	• During operation.	• The load is too large. • The holding electromagnetic brake is in working status.	• Reduce the load. • Release the electromagnetic brake. • Inspect the electromagnetic brake and renew if abnormalities are found.
		• Regeneration frequency is high.	• Reduce the load. • Increase the time constant. • Lessen the frequency of acceleration and deceleration. • Grade up the type of the servo actuator.
		• Ambient temperature is too high.	• Drop the ambient temperature.
NFB trip	• When the main circuit power is applied.	• Failures in the control substrate.	• Renew the servo driver.
	• When the main circuit power is applied. • When the operation preparation command is entered. • During operation.	• Disconnection of the main circuit power line.	• Connect the main circuit power line properly.
		• Troubles in the diode module in the main circuit.	• Renew the servo driver.
Open power line.	• When the main circuit power is applied. • When the operation preparation command is entered.	• Failures in the control substrate.	• Renew the servo driver.
	• At the time of servo on. • During operation.	• Disconnection in the servo motor power line.	• Renew the servo motor power line.
Abnormalities in the circuit	• When the main circuit power is applied. • When the operation preparation command is entered. • At the time of servo on.	• Failures in the control substrates.	• Renew the servo driver.
Abnormalities in the 5V power supply	• When the main circuit power is applied. • When the operation preparation command is entered. • At the time of servo on. • During operation.	• Molten fuse.	• Renew the fuse. DM20 made by Daito Tsushinki Co., Ltd.
		• Connection error of the encoder signal line.	• Renew encoder signal wire.
		• Failures in the control substrate.	• Renew the servo driver.

7.4 Abnormalities in the battery and when to renew it

Lithium battery is used to back-up parameter settings and multiturn absolute encoder data.

7.4.1 When to renew the battery

- When the battery (lithium battery) voltage drops, the display (BATAL) lights and external output signal [battery alarm (BALM). is outputted.
- Even after the battery alarm appears, the battery may support for about a week.

  Data disappear after a week and renew the battery in an earlier stage for precautions.
  - With the incremental encoder

    Renew after 4 years of use.
  - With the multiturn absolute encoder

    Renew at the earlier date of either 2 years of use or 12000 hours in total of power failure.

7.4.2 Cautions when renewing the battery

Be careful that the electronic parts in the controller may not be affected by static electricity.

- Ground the body of the person touching the battery.
- Do not touch the conductive sections and electronic parts directly.
- Always exchange the battery with the main circuit power applied.
- After renewal, check the parameter settings.
- If parameter settings disappear, set them again.

7.4.3 Applicable types of the battery and connector

- The following battery is used:

Name:	Lithium battery
Type and rating:	ER6-RC 3.6V 2000mAh With connector
Specifications of the connector:	Housing IL-2S-S3 (N)
	Contact IL-C2-1-5000
	Made by Nihon Koku Denshi Co., Ltd.

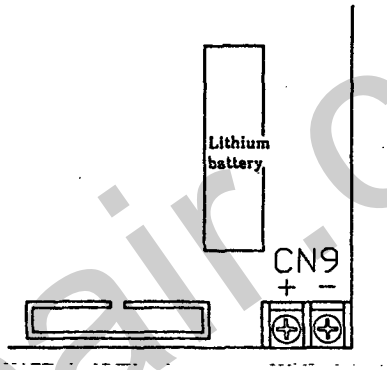

7.4.4 Specifications of external power supply

When 4.5V to 6V batteries are provided externally, the power may be commonly used.
In this case, make sure to remove the battery in the controller before connecting the external battery to CN9.
This connection should be made with the main circuit power applied.